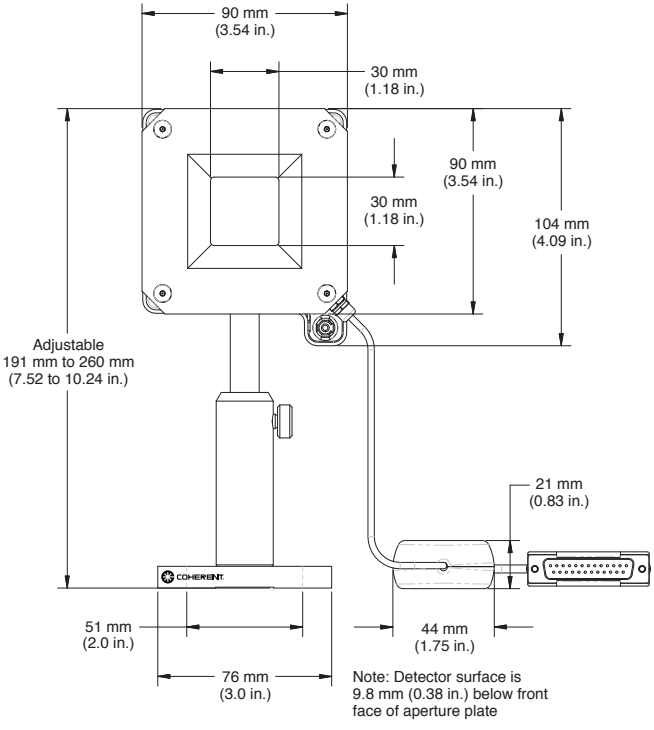
90 mm
(3.54 in.)
30 mm
(1.18 in.)
90 mm
(3.54 in.)
30 mm
(1.18 in.)
104 mm
(4.09 in.)
Adjustable
191 mm to 260 mm
(7.52 to 10.24 in.)
21 mm
(0.83 in.)
COHERENT
51 mm
(2.0 in.)
44 mm
(1.75 in.)
76 mm
(3.0 in.)
Note: Detector surface is
9.8 mm (0.38 in.) below front
face of aperture plate

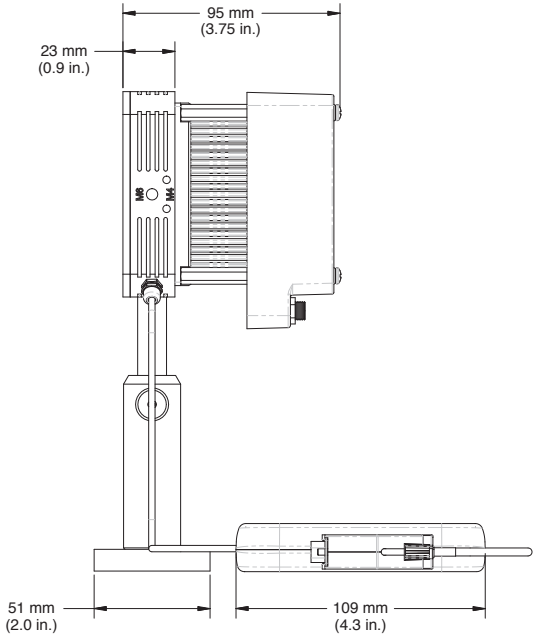
95 mm
(3.75 in.)
23 mm
(0.9 in.)
M6
M4
51 mm
(2.0 in.)
109 mm
(4.3 in.)

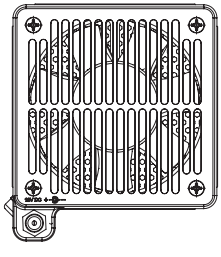

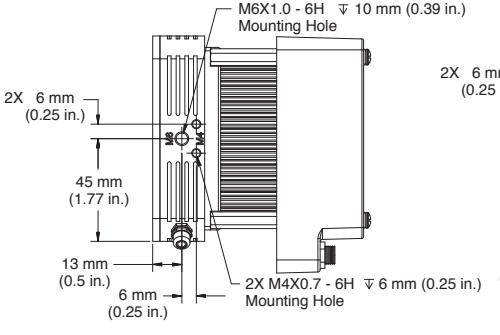
M6X1.0 - 6H ↧ 10 mm (0.39 in.)
Mounting Hole
2X 6 mm
(0.25 in.)
M6
M4
45 mm
(1.77 in.)
13 mm
(0.5 in.)
6 mm
(0.25 in.)
2X M4X0.7 - 6H ↧ 6 mm (0.25 in.)
Mounting Hole

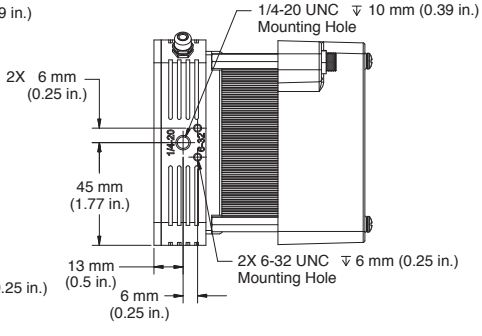
1/4-20 UNC ↧ 10 mm (0.39 in.)
Mounting Hole
2X 6 mm
(0.25 in.)
1/4-20
6-32
45 mm
(1.77 in.)
13 mm
(0.5 in.)
6 mm
(0.25 in.)
2X 6-32 UNC ↧ 6 mm (0.25 in.)
Mounting Hole