COHERENT

Preinstallation Manual DIAMOND™ J-5V Series OEM Lasers

COHERENT

Preinstallation Manual
DIAMOND™ J-5V Series
OEM Lasers

COHERENT®
1280 Blue Hills Avenue
Bloomfield, CT 06002

Patents referenced in this manual are active when the manual is printed (see last page for date). You are advised to check to see if the patents are still active **http://portal.uspto.gov/external/portal/pair**.

Every effort was made to make sure that the data shown in this document is accurate. The information, figures, tables, specifications, part numbers, and schematics contained in this manual are subject to change without notice. Coherent makes no warranty or representation, either expressed or implied, related to this document. In no event will Coherent be liable for any direct, indirect, special, incidental, or consequential damages caused by any defects in its documentation.

Technical Support

In the U.S.:

Should you experience any difficulties with your laser or need any technical information, please go to our website **www.Coherent.com**. Should you need further assistance, please contact Coherent Technical Support by e-mail **Product.Support@Coherent.com** or telephone, 1-800-367-7890 (1-408-764-4557 outside the U.S.). Please be prepared to supply the model and laser head serial number of your laser system also the description of the problem and any attempted corrective steps to the Product Support Engineer responding to your request.

Telephone coverage is available Monday through Friday (except U.S. holidays and company shutdowns). Inquiries received outside normal office hours will be documented by our automatic answering system and will be promptly returned the next business day.

Outside the U.S.:

If you are located outside the U.S., please visit **www.Coherent.com** for technical assistance, or contact your local Service Representative. Service Representative telephone numbers and addresses can be found on the Coherent website.

Coherent provides telephone and web-based technical assistance as a service to its customers and assumes no liability for any injury or damage that can occur at the same time with such services. Under no conditions do these support services effect the terms of any warranty agreement between Coherent and the buyer. Operation of any Coherent laser with any of its interlocks defeated is always at the operator's own risk.

TABLE OF CONTENTS

LIST OF ILLUSTRATIONS

LIST OF TABLES

Signal Words and Symbols in This Manual and on the Laser System

This documentation may contain sections in which particular hazards are defined or special attention is drawn to particular conditions. These sections are indicated with signal words in accordance with ANSI Z-535.6 and safety symbols (pictorial hazard alerts) in accordance with ANSI Z-535.3 and ISO 7010.

Signal Words

Four signal words are used in this documentation: **DANGER**, **WARNING**, **CAUTION,** and ***NOTICE***.

The signal words **DANGER**, **WARNING,** and **CAUTION** designate the degree or level of hazard when there is the risk of injury:

DANGER!
Indicates a hazardous situation that, if not avoided, <u>will</u> result in <u>death or serious injury</u>. This signal word is to be limited to the most extreme situations.

WARNING!
Indicates a hazardous situation that, if not avoided, <u>could</u> result in <u>death or serious injury</u>.

CAUTION!
Indicates a hazardous situation that, if not avoided, could result in <u>minor or moderate injury</u>.

The signal word "***NOTICE***" is used when there is the risk of property damage:

NOTICE!
Indicates information considered important, but not hazard-related.

Messages relating to hazards that could result in both personal injury and property damage are considered safety messages and not property damage messages.

Symbols

The signal words **DANGER**, **WARNING**, and **CAUTION** are always emphasized with a safety symbol that indicates a special hazard, regardless of the hazard level:

This symbol is intended to alert the operator to the presence of important operating and maintenance instructions.

This symbol is intended to alert the operator to the danger of exposure to hazardous visible and invisible laser radiation.

This symbol is intended to alert the operator to the presence of dangerous voltages within the product enclosure that may be of sufficient magnitude to constitute a risk of electric shock.

This symbol is intended to alert the operator to the danger of Electro-Static Discharge (ESD) susceptibility.

This symbol is intended to alert the operator to the danger of crushing injury.

This symbol is intended to alert the operator to the danger of a lifting hazard.

Preface

This manual provides preinstallation instructions for DIAMOND™ J-5V Series lasers – OEM version. The laser safety section must be reviewed thoroughly prior to operating the DIAMOND J-5V Series laser system.

NOTICE!
Read DIAMOND J-5V (1279474) Operator's Manual carefully before operating the laser for the first time. Special attention must be given to the material in Section One: Laser Safety.

WARNING!
Use of controls or adjustments or performance of procedures other than those specified in this manual may result in hazardous radiation exposure.

NOTICE!
Use of the system in a manner other than that described within this manual may impair the protection provided by the system.

Export Control Laws Compliance

It is the policy of Coherent to comply strictly with the U.S. export control laws.

Export and re-export of lasers manufactured by Coherent are subject to U.S. Export Administration Regulations, which are administered by the Commerce Department. In addition, shipments of certain components are regulated by the State Department under the International Traffic in Arms Regulations.

The applicable restrictions vary depending on the specific product involved and its destination. In some cases, U.S. law requires that U.S. government approval be obtained prior to resale, export, or re-export of certain articles. When there is uncertainty about the obligations imposed by U.S. law, clarification should be obtained from Coherent or an appropriate U.S. government agency.

Products manufactured in the European Union, Singapore, Malaysia, Thailand: These commodities, technology, or software are subject to local export regulations and local laws. Diversion contrary to local law is prohibited. The use, sale, re-export, or re-transfer directly or indirectly in any prohibited activities are strictly prohibited.

SECTION ONE: LASER SAFETY

Optical Safety

DIAMOND J-5V Series lasers have undergone extensive testing to ensure that, with proper usage, it is a safe and reliable device.

Laser light, because of its special properties, poses safety hazards not associated with light from other sources. The safe use of lasers requires that all laser users and everyone near a laser be aware of the dangers involved in laser operation.

DANGER!
Class 4 laser product. Avoid eye or skin exposure to direct or scattered radiation.

Viewing Distance

The J-5V Series lasers produce optical power levels that are dangerous to the eyes and skin if exposed directly or indirectly. These products must be operated only with proper eye and skin protection at all times. Never view directly emitted or scattered radiation with unprotected eyes. When viewing the laser during operation, the operator must maintain the Nominal Ocular Hazard Distance (NOHD) between the laser or scattered radiation and the operator's eyes. Figure 1-1 on page 1-2 summarizes the NOHD for the power range of the J-5V Series for direct viewing of the collimated beam along with two other common configurations. The NOHD in this figure is based on the Maximum Permissible Exposure (MPE = 0.1 W/cm^2) level for each power condition as specified in ANSI Z136.1-2007 and IEC 60825-1-2007 (Rule 2 applies over nearly all of the operating range of this laser).

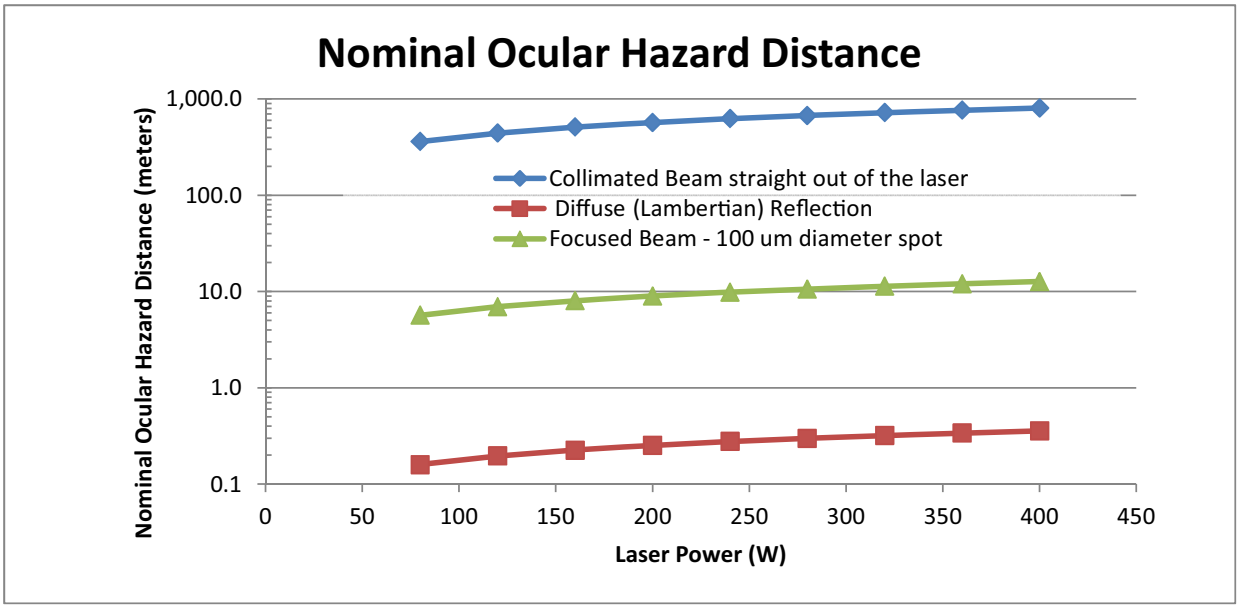

Figure 1-1. Nominal Ocular Hazard Distance (NOHD) for indicated conditions calculated per ANSI Z136.1-2007

WARNING!
Direct eye contact with the output beam from the laser will cause serious eye damage and may cause blindness.

All personnel in the same room as the laser or anyone who may be exposed to the laser beam should be informed that a laser is in operation. All personnel must wear laser safety glasses which protect against the wavelengths in use.

WARNING!
Exercise caution to protect against specular reflections since all reflections at the J-5V Series wavelength are invisible.

Eye safety is a great concern when using a high-power laser such as the J-5V Series laser. The long NOHD for the collimated beam highlights the need to avoid stray specular reflections from polished or shiny surfaces. These reflections, while weaker than the main beam, may still be sufficiently intense to cause eye damage.

Laser beams are also powerful enough to burn skin, clothing, or paint. They can ignite volatile substances such as alcohol, gasoline, ether, and other solvents and can damage the light-sensitive elements in video cameras, photomultipliers, and photodiodes.

Coherent provides the following recommendations to promote the safe use of all J-5V Series lasers. Operators are advised to adhere to these recommendations and employ sound laser safety practices at all times.

- Use protective eyewear when operating the laser and guard against inadvertent exposure to skin or clothing. Select eyewear which is suitable for use with the wavelengths and radiation intensity that the laser emits. Refer to the *Guide for Selection of Laser Eye Protection*, Laser Institute of America (6th Edition), 2007.
- Do not remove the protective covering over the beam path. During normal operation, internal reflections are confined within the laser head and pose no safety hazard.
- Never look directly into the laser output port when the power is on.
- Set up the laser and all optical components used with the laser away from eye level. Provide enclosures for the laser beam.
- Use the laser in a room with access controlled by door interlocks. Post warning signs. When operating the laser, limit access to the area to individuals who are trained in laser safety.
- Do not use the laser in the presence of flammables, explosives, or volatile solvents such as alcohol, gasoline, or ether.

For additional information on laser safety, refer to the following publications:

- *American National Standard for the Safe Use of Lasers*, Z136.1-2007, American National Standards Institute, 2007.
- *Performance Standards for Laser Products*, United States Code of Federal Regulations, 21 CFR 1040 10 (d).
- *Laser Safety Guide*, Laser Institute of America. (11th Edition). Orlando, FL 2007.
- D. Sliney and M. Wolbarsht. *Safety with Lasers and Other Optical Sources*,. Plenum Publishing Company, New York, NY, 1980.

Many of these documents on laser safety are available through the Laser Institute of America, 13501 Ingenuity Drive, Suite 128, Orlando, FL 32826. Call them at 800-345-2737, or visit their website: **www.lia.org**.

Electrical Safety

All J-5V Series laser systems, which consist of the laser head and the RF power module, require high current at + 48 VDC to operate. This voltage is sourced from commercially available power supplies from various manufacturers. The typical input voltage to these power supplies is 208 or 480 VAC. These voltages can be lethal. Every portion of the electrical system should be treated as if it is at a dangerous voltage level.

High RF power levels are present in the RF power module compartment and laser resonator compartment when the power is on. There is no RF radiation exposure hazard to personnel so long as all protective covers are not removed.

Laser Safety Requirements

This laser does not conform to the United States Government requirements for laser safety. In the United States, it is the responsibility of the buyer that the product sold to the end user complies with all laser safety requirements prior to resale. These laser safety requirements are contained in 21 CFR, Sub Chapter J and are administered by the Center for Devices and Radiological Health (CDRH).

Integrators who incorporate a DIAMOND J-5V Series laser into other products that they introduce into United States commerce are defined in the law as manufacturers who are thus required to manufacture their products to conform to the Federal standard, certify them, and submit product reports to the CDRH.

The text of this federal standard is available from the U.S. Government Printing Office Bookstore located in most major cities in the U.S. as well as Washington, D.C. A report detailing how the laser product complies with the Federal standard is required before the product is shipped. The form of this report is covered in a pamphlet entitled: *Compliance Guide for Lasers*, HHS Publication FDA 86-8260. This pamphlet is available at no cost from:

U.S. Food and Drug Association
Center for Devices and Radiological Health
Document Mail Center – WO66-G609
Sliver Spring, MD 20993-0002
www.fda.gov

For jurisdictions outside of the United States, it is the responsibility of the buyer of this laser device to ensure that it meets the local laser safety requirements.

Protective Covers (Safety Interlocks)

The laser's protective covers are not interlocked and should only be removed by trained service technicians.

NOTICE!
Use of controls or adjustments, or performance of procedures other than those specified herein, may result in hazardous radiation exposure.

Radiated Emission Compliance

J-5V Series lasers have been tested and verified that they are in compliance with the radiated emission limits of FCC Part 18 Subpart C Radiated Emissions as required for industrial, scientific, and medical equipment. Test plan / procedure per ANSI C63.4.

Compliance to Standards Relevant to CE Mark

The J-5V Series of lasers are OEM products, and are sold as components for integration into complete laser systems by a system integrator. These products are tested and CE Marked as independent products. For specific details regarding what applicable compliance directives and standards the products have been tested to, please refer to the Declaration of Conformity which is available upon request from Coherent, per contact information on page ii of this manual.

Compliance to applicable standards for a particular laser tool incorporating J-5V lasers must be demonstrated by the manufacturer of the complete system. The primary issue for the system integrator is to design covers, shielding, grounding, routing of electrical cable assemblies, and control elements with the proper safety features so that during subsequent testing the system meets the appropriate standards.

Coherent recommends the following guidelines to control the amount of radiated interference:

- Use high quality cables and connectors for all electrical connections
- Verify grounding of cable shields, generally at both ends of the cable

Labeling

Figure 1-2 shows the positions of all the labels located on the DIAMOND J-5V Series laser systems.

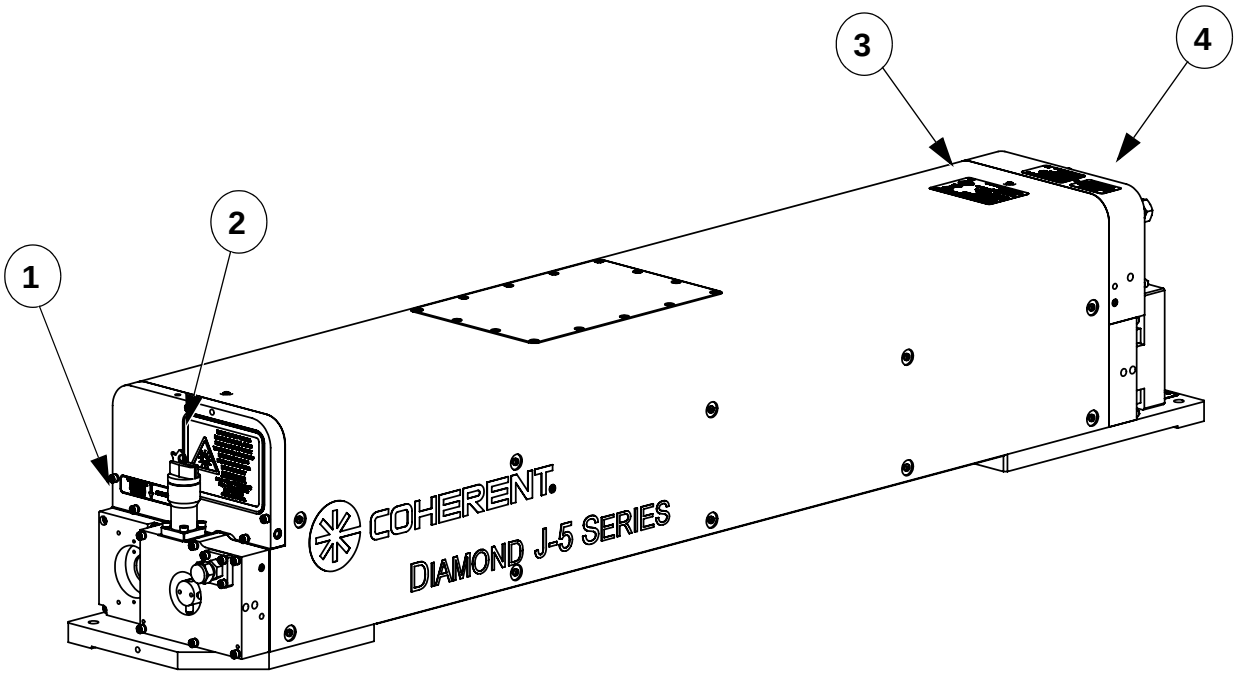

a. Output End

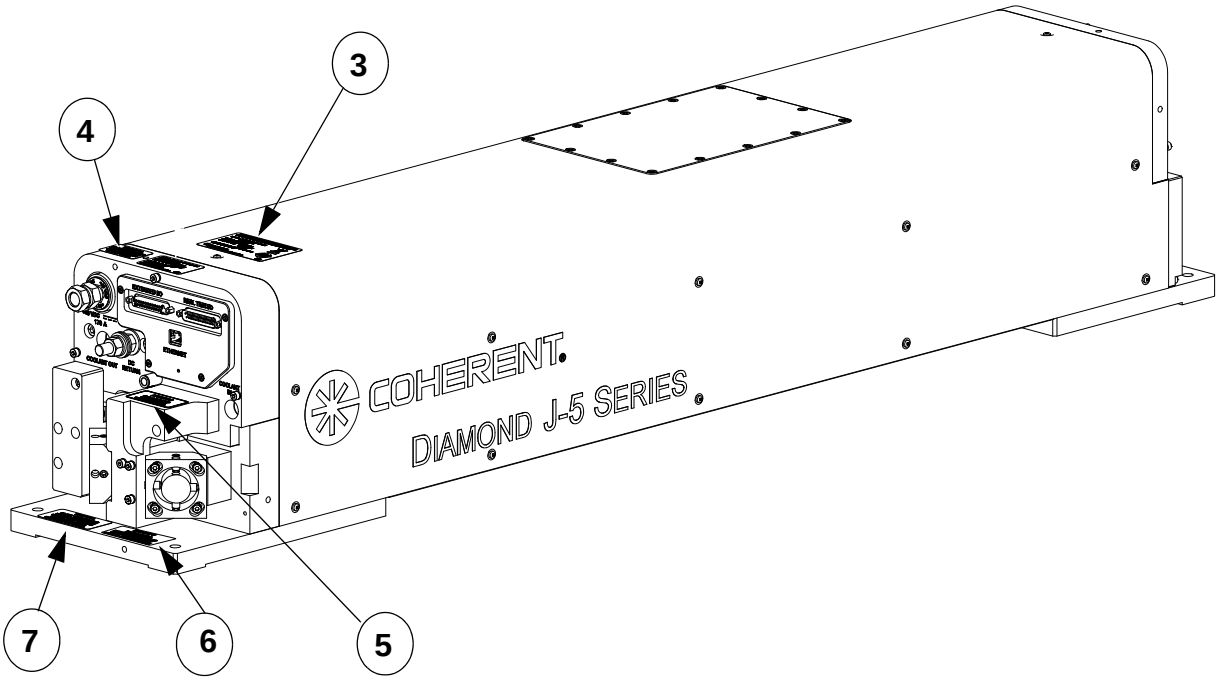

b. Interface End

Figure 1-2. Label Placement

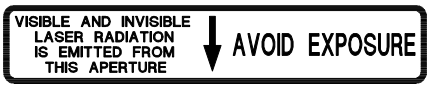

1 – Laser Aperture Label

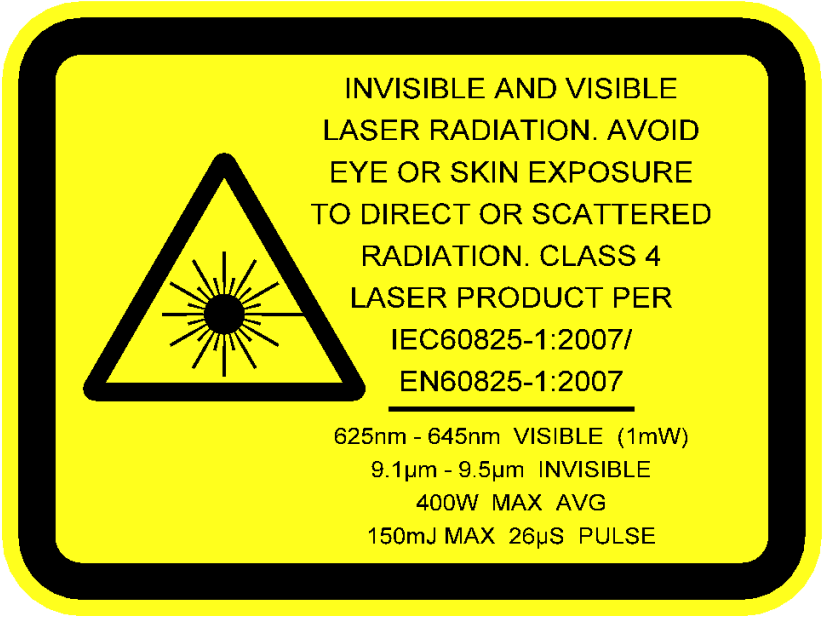

2 – Laser Classification Label

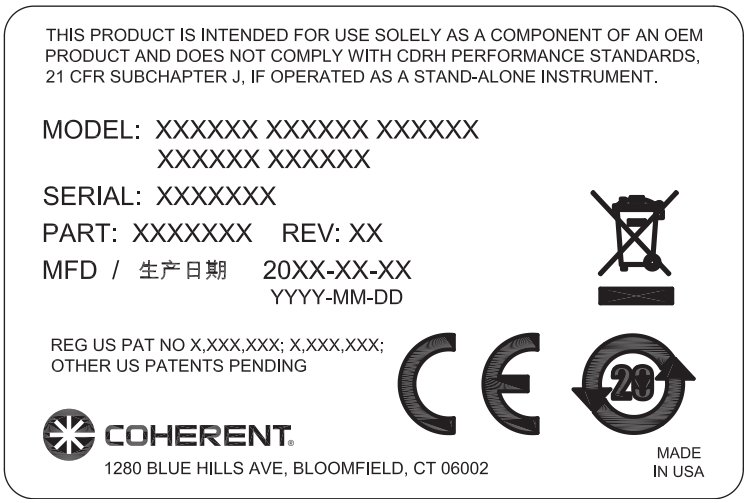

3 – Laser System Compliance Label

Figure 1-3. Labels

4 – High Current Hazard Warning Label

5 – Drainage Warning Label

6 – Tipping Hazard Warning Label

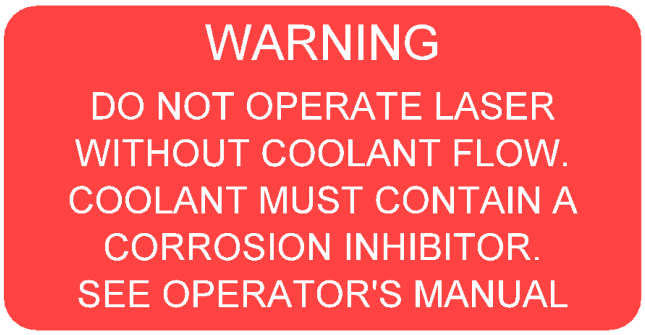

7 – Coolant Requirement Warning Label

Figure 1-3. Labels (Continued)

European Waste Electrical and Electronic Equipment (WEEE, 2002)

The European Waste Electrical and Electronic Equipment (WEEE) Directive (2002/96/EC) is represented by a crossed-out garbage container icon. The purpose of this directive is to minimize the disposal of WEEE as unsorted municipal waste and to facilitate its separate collection. This icon is incorporated into the Laser and RF Module Compliance labels.

SECTION TWO: SYSTEM DESCRIPTION

Introduction

The DIAMOND™ J-5V Series laser systems are integrated, RF excited, liquid-cooled, sealed-tube, pulsed industrial CO_2 lasers and consist of a single housing incorporating the laser resonator and beam conditioning optics, RF power module, and control/diagnostics module. These integrated systems operate on + 48 VDC at high currents; therefore a DC power supply is required. To remove waste heat from the laser system, external liquid cooling is essential. A continuous supply of clean, dry purge gas to the laser system is needed to prevent condensation and reduce contamination on optical surfaces. Internal control electronics act on external signals to vary pulse frequency and duty cycle while monitoring laser performance and safety circuits.

The laser system can be equipped with an optional safety shutter/red pointer beam which in the closed state blocks the primary laser beam and replaces it with a low power red pointer beam.

A simplified laser system block diagram is shown in Figure 2-4 on page 2-2.

Purpose of This Manual

This manual is designed to assist the Original Equipment Manufacturer (OEM) during the integration of any DIAMOND J-5V Series laser. It contains information on the performance and operation of the laser as well as installation and control methods. This OEM manual is intended to be used by trained staff during the process of integration into a laser tool.

J-5V Series Lasers

All DIAMOND J-5V Series lasers are compatible with the generation of a wide range of amplitude modulated pulsed formats. This allows the user complete control of the laser's output temporal characteristics. Because the control circuitry monitors the applied signal to assure the laser is operated within safe duty cycle limits, the user does not need to be concerned that the applied control signals will damage the laser.

All J-5V Series lasers are equipped with a powerful embedded diagnostic system that is useful in providing onboard diagnostics (setup and troubleshooting) as well as fault isolation. Laser data is accessible using a standard LAN connection via HTML protocol. A detailed description of the embedded diagnostics is available in Appendix A: Embedded Diagnostics in the operator's manual. A simplified laser system block diagram is shown in Figure 2-4.

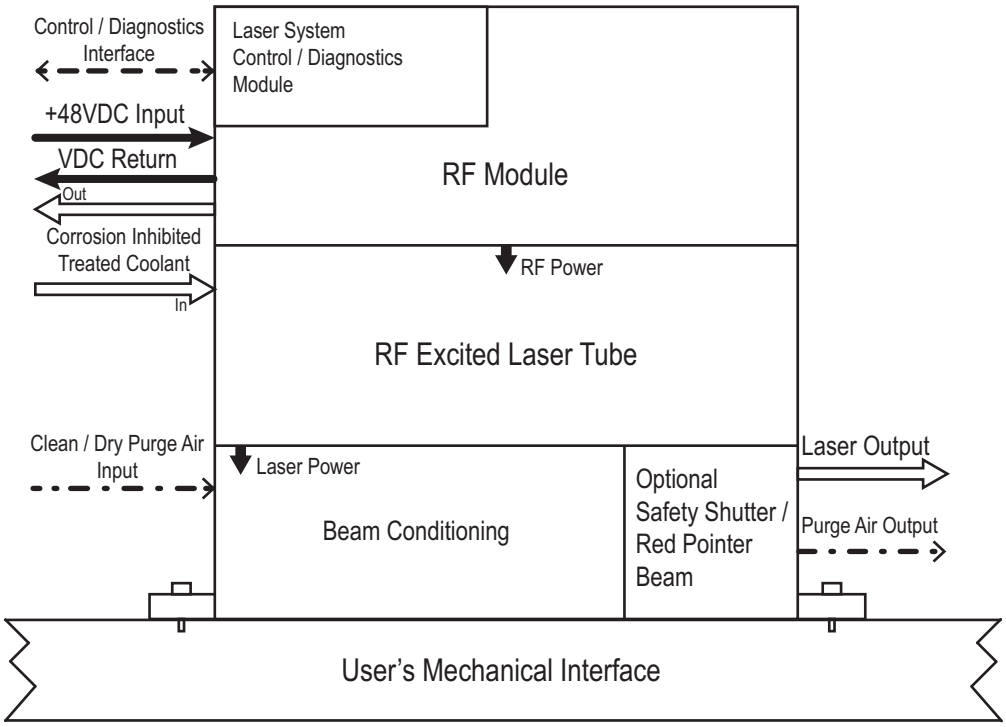

Figure 2-4. Simplified System Block Diagram

Laser System Components

The DIAMOND J-5V Series laser housing contains the laser resonator in a vacuum sealed compartment, RF power module along with the RF matching network in a second compartment, and the beam conditioning optics and optional shutter module in a third compartment. A removable controls/diagnostic module is integrated into the front panel of the RF power module. A U-shaped housing cover serves both to improve the laser's appearance as well as to provide a protective cover over the beam conditioning optics compartment (). The laser system was designed to enable removal of the RF power module with only access from the top and service end of the laser system.

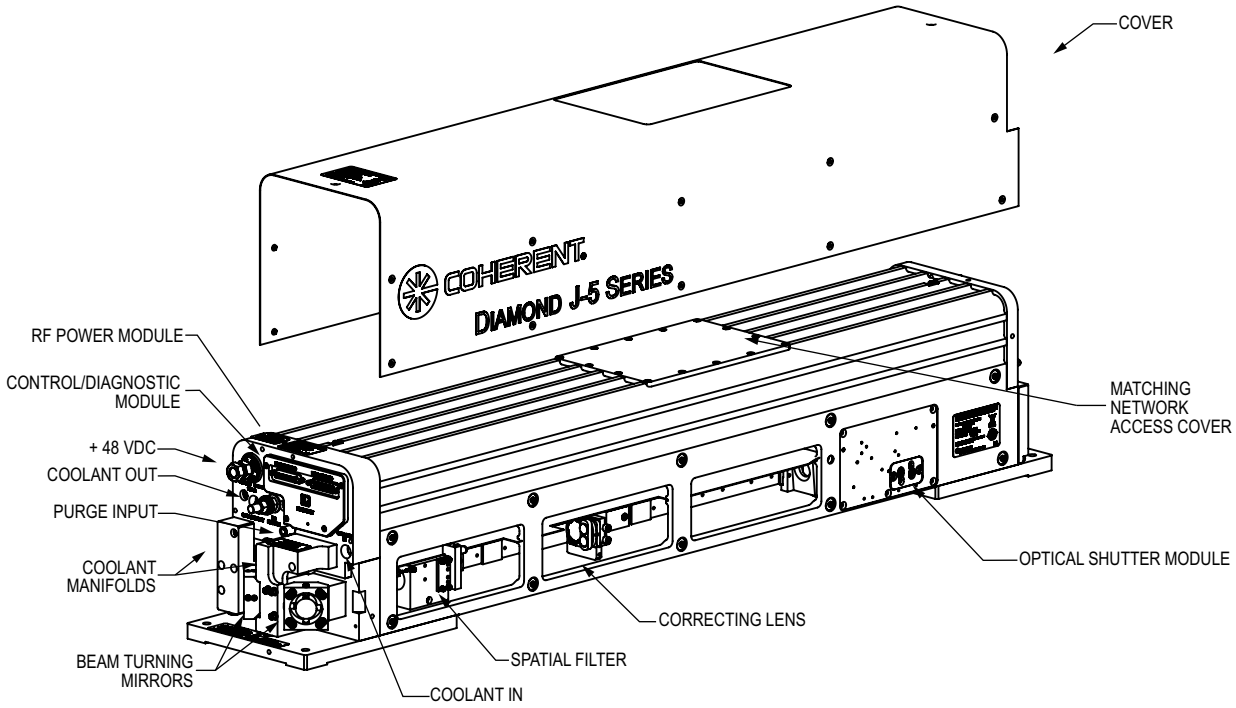

Figure 2-5. Laser System Components

NOTICE!
The laser system incorporates a sealed laser resonator assembly compartment, which by design requires only infrequent laser gas exchanges or periodic refills for operation.

The all metal construction of the laser head provides high thermal stability and resistance to damage due to shock and/or vibration.

Laser Resonator

The resonator assembly consists of a two mirror optical cavity with fluid-cooled rectangular shaped (slab design) electrodes extending the length of the resonator compartment. An RF matching network is mounted on top of the resonator compartment within the RF power module compartment and coils attached to the electrodes are positioned to create a uniform distribution of RF energy along the electrodes (see Figure 2-6).

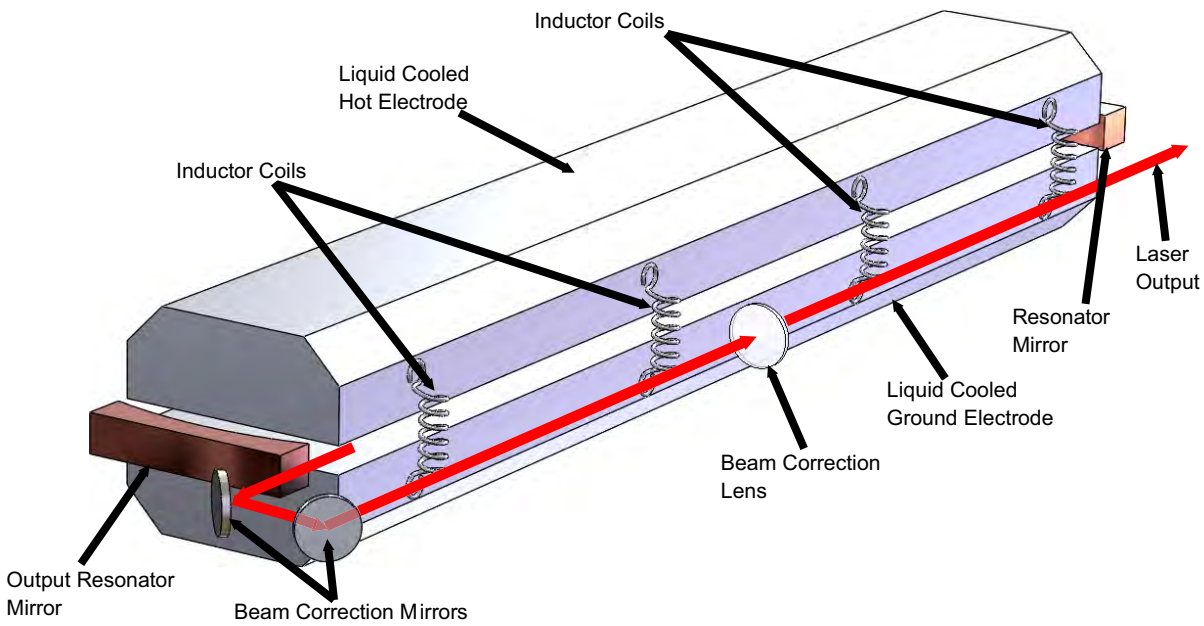

Figure 2-6. Laser Resonator Assembly

One of the 100% reflecting end mirrors partially covers the electrode area. The gap at the end of the mirror forms the output path for the laser beam. The beam exiting in this gap passes through a zinc selenide sealing window at the output end of the tube.

Optics

The resonator optics are within the sealed compartment and require no maintenance or alignment. Upon exiting the laser cavity, the asymmetrical laser beam (wide in one transverse beam axis and narrow in the orthogonal beam axis) propagates through an output window and on through a series of precision aligned optical components. These components serve to create a circular symmetrical propagating optical beam. As the beam is corrected for symmetry, it is also focused through a narrow set of knife edges. These knife edges are set wide enough to allow the main lobe of radiation to pass, but also strip off unwanted side-lobe energy. Finally, the beam passes through a final lens which nominally collimates the beam for minimum divergence, then to an optional shutter assembly before it exits the laser system aperture.

Laser Safety Shutter Module with Diode Pointer (Optional)

The optional laser safety shutter module with diode pointer has been designed specifically for the J-5 series lasers. It is integrated into the optics compartment just before the output of the laser system. If this option is included, all the necessary electrical power, control, and cooling required to operate the shutter are factory installed. The shutter is controlled via signals applied to the auxiliary control connector on the control/diagnostic module (See Section Four: Control Interfaces for details). The shutter is designed to terminate laser beam emission for user safety only and should not be used as a process shutter that requires rapid open and close cycles. When the shutter is closed, the laser beam is reflected off of the shutter blade into a liquid-cooled beam dump to terminate the beam. The blade is designed for fail-safe operation and is closed with the power off. While in safe mode, a low power red laser pointing diode replaces the high power beam. The red laser pointer beam is factory aligned with the main beam. The beam dump temperature is continuously monitored. A laser system temperature fault will occur if the beam dump temperature exceeds a safe operating level which could occur if there is no or low coolant flow to the beam dump.

Key shutter features include:

- One million cycles minimum
- Fail-safe blade operation
- Gold-coated main reflecting blade
- Blade detection for open position.
- Blade detection for closed position.
- RTD temperature sensors on blade and beam dump
- Adjustable 635 nm diode pointer. (X-Y, tip-tilt)
    - Optical Output Power: 0.5 to 1.0 mW
    - Wavelength: 635 +/- 10 nm
    - Beam Diameter: 3 mm
    - Divergence: < 2 mrad

Simmer Circuit

The simmer circuit applies short duration RF pulses at a 1 kHz rate to the tube gas in order to promote rapid starting of the laser after periods of being turned off. Each pulse is terminated when the beginning of gas “breakdown” is detected. Breakdown marks the beginning of an active discharge in the gas, and occurs well before any light is emitted by the laser. Therefore, the simmer keeps the gas active (meaning that the laser can start quickly and repeatably) without itself causing lasing.

Control Electronics

The J-5V Series control electronics provide control, diagnostics, and fault management for the system. Primary control and diagnostics are provided through dedicated signal connections on the interface panel. The hardware interface circuitry is highly similar to the other DIAMOND OEM products. See Section Four: Control Interfaces for a detailed interface description.

A secondary Ethernet interface is provided for diagnostics and troubleshooting. See Appendix A: Embedded Diagnostics in the operator's manual for more information.

All J-5V Series lasers are equipped with a main controller as well as a microcontroller located in the RF module. Fault management is accomplished by the main controller using data from a variety of sensors as well as data collected by the RF module's microcontroller which communicates with the main controller over a serial bus.

Laser Temperature Monitor

All J-5V Series lasers require water with a corrosion inhibitor additive as the cooling medium to remove heat from the laser head and RF power module. Temperature probes and circuits within the laser head and RF power module continuously monitor the laser temperature whenever the laser is on. If the internal laser temperature falls outside preset limits, the laser will not operate and will indicate a temperature fault condition. To prevent temperature faults, the customer must maintain proper coolant temperature and flow as specified in the utility requirements.

NOTICE!
Failure to provide proper coolant temperature and flow to this laser will result in intermittent or halted operation.

NOTICE!
Failure to provide the proper fluid flow and composition to this laser will void the warranty.

RF Power Module

The RF power module provides pulsed RF power to the laser head to energize the laser gas mixture in the tube. The laser output pulse (width and frequency) is based on an input modulation signal to the RF power module.

The RF power module should always be physically and electrically installed into the laser system housing. The RF module should never be removed and operated by the user. This is unsafe for the user and could damage the RF module.

The RF power module control circuitry also has the following features:

- Provides protection from duty cycles exceeding model specific values (see product data sheet located on the Coherent website: **www.coherent.com**).
- Monitors forward and reflected RF power to and from the laser head.
- Contains a factory set VSWR limit (a ratio between two monitored voltages, representing efficient coupling of RF Energy) that limits duty cycle in case the laser fails to start.
- Provides a low power RF simmer pulse to ensure that the laser will start after long periods of being off.
- Contains embedded sensors which support fault isolation. Further description of this capability is found in Appendix A: Embedded Diagnostics in the operator's manual.

DC Power Supply

A high current 48 VDC power supply is the required power source for all J-5V Series laser systems.

Note that the laser presents a pulsed dynamic load to the DC power supply. To observe the effect of laser modulation on the DC power supply, connect an oscilloscope across the DC input terminals of the RF power module while applying modulation pulses to the laser.

Coherent has qualified air-cooled DC power supplies for use with the J-5V Series laser system. Refer to the installation instructions provided by the DC power supply manufacturer to determine the correct mounting, AC input power cord/wiring specifications, cooling requirements, connections, and controls.

It is the responsibility of the system integrator to provide AC input power wiring (electrical disconnect, circuit breaker/fusing, power cord, receptacles, and mating plugs). Consult a qualified electrician to select and install the appropriate components that meet local electrical codes.

The DC power supply output cables are a critical part of the overall system. Coherent can provide the DC output cables required to handle the high current requirement. Refer to Table 2-1 through Table 2-2.

Laser System Specifications

The J-5V Series laser system's physical characteristics and utility requirements common to all J-5V Series models are given in Table 2-1 and Table 2-2. Laser performance specifications for a specific J-5V Series laser model are provided in its data sheet available online at **www.coherent.com** and in the test report provided with each laser system.

Table 2-1. Physical Characteristics

PARAMETER	VALUE
LASER PHYSICAL CHARACTERISTICS	
Weight	61 kg (134 lbs.)
Dimensions (L x W x H)	1235.5 x 198.1 x 227.6 mm (48.64 x 7.80 x 8.96 in.)

Table 2-2. Utility Requirements

PARAMETER	VALUE
ENVIRONMENT (OPERATING)	
Altitude	< 2,000 m (< 6,500 ft.)
Relative Humidity(1)	< 95% non-condensing for inlet fluid temperature
Ambient Temperature	5 to 45°C (41 to 113°F)
Shock & Vibration	1 G static acceleration 0.2 G RMS vibration
ELECTRICAL	
DC Input Voltage	48 VDC ± 1.0%
Ripple Voltage	< ± 1% of peak
Line Regulation	≤ ± 1%
Load Regulation	≤ ± 1%
DC Continuous Current(2)	≤ 85 A
Dynamic Peak Current	≤ 120 A peak for ≤ 6 ms
RECOMMENDED DC POWER CABLES (2, 1 RED AND 1 BLACK)	
DC Cable Length (each)	3 m (10 ft.)
DC Cable Wire Gauge (each)	42 mm^2 (1/0)

Table 2-2. Utility Requirements (Continued)

PARAMETER	VALUE
LIQUID COOLING	
Composition	Distilled or de-ionized water plus corrosion inhibitor
Flow Rate	> 6.6 lpm (> 1.74 gpm)
Heat Load (3)	< 4.5 kW (< 15.4 kBtu/hr)
Maximum Static Pressure	827 kPa (120 psi)
Pressure Differential (4)	240 kPa (34.81 psi) @ 6.6 lpm (1.74 gpm)
Set Temperature Range (at laser head coolant inlet)	21 to 25°C (69.8 to 77°F)
Temperature Variation about Set Temperature	< ± 1°C (± 1.8°F)
LASER PURGE GAS	
Composition	N_2 or Clean, Dry Air
Flow Rate	2.80 lpm

The above specifications subject to change without notice.

(1) Do not operate at or below dew point.

(2) Current rating may vary with specific model.

(3) If a closed-loop system is used, it must have sufficient capacity to handle this heat load in addition to meeting the other fluid requirements listed in this table.

(4) Measured from system inlet to outlet ports and does not include the pressure drop from chiller fittings or the supply and return hose.

Laser Dimensional Drawings

The laser dimensions and required clearance are shown in Figure 2-7.

Note that the clearance dimensions given for interface connections and service access are minimums. Increasing the clearance dimensions will provide ease of installation, troubleshooting, and service.

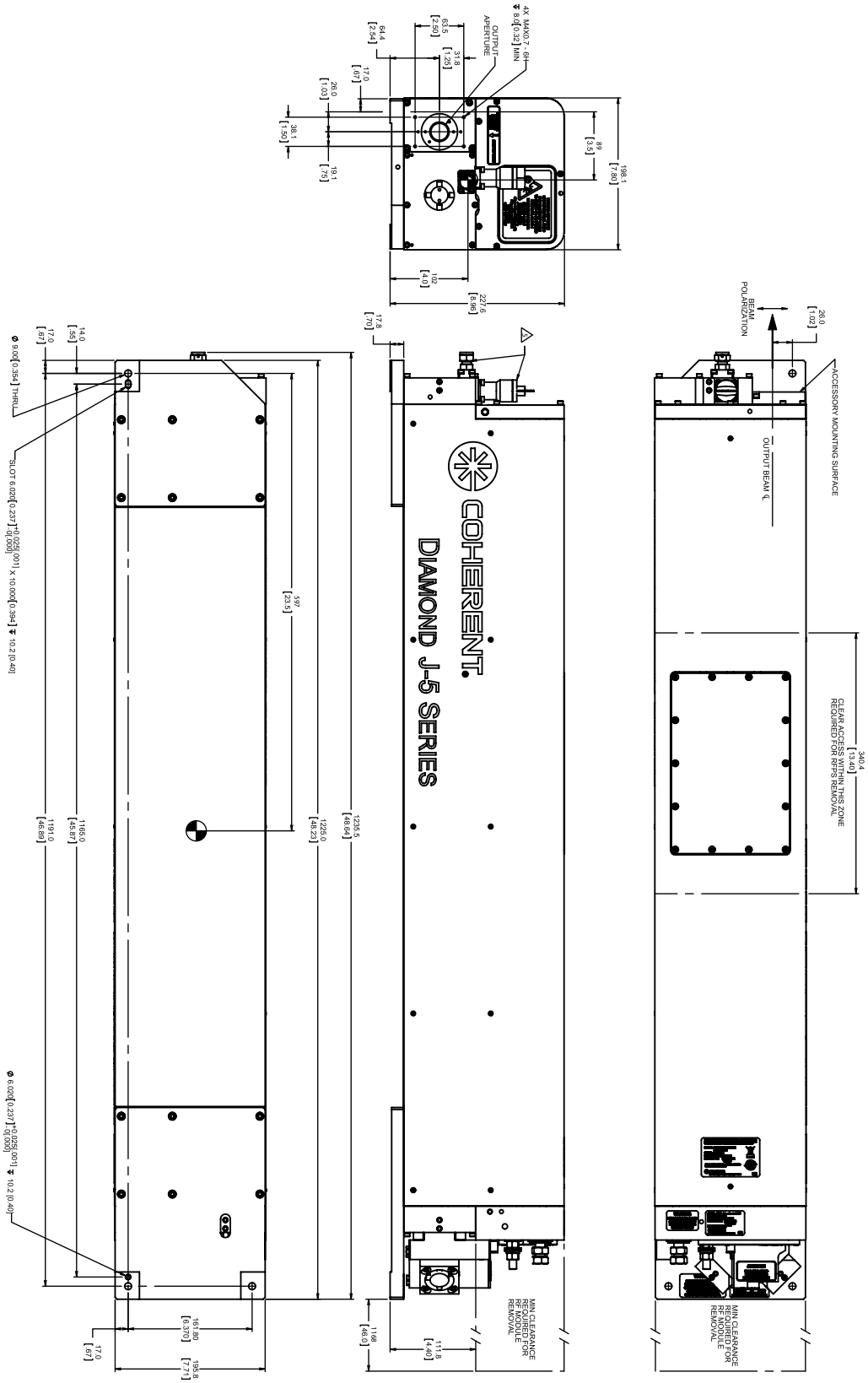

Figure 2-7. J-5V Dimensions (including clearance)

SECTION THREE: UTILITY REQUIREMENTS AND SYSTEM INSTALLATION

NOTICE!
Before installation, it is essential that the customer read this manual thoroughly. It is important that the user become familiar with all aspects of the installation and operation of the J-5V Series laser system, including and specifically the information contained in Section One: Laser Safety.

Preinstallation Checklist

In order to perform a smooth integration of the laser system into a tool or installation at a customer site, it is necessary to prepare in advance. A preinstallation checklist outlining the general requirements is provided in Table 3-1.

Table 3-1. Preinstallation Checklist

ACTIVITY	GENERAL REQUIREMENTS	REFERENCE(S)
Confirm Laser Environment	[ ] Temperature and Humidity in specification [ ] Cleanliness [ ] Vibration [ ] Ventilated space	"Confirm Laser Environment" on page 3-3 "Operation in Humid Environments" on page 3-4
Receive and Inspect	[ ] Area is clean and sufficiently large enough to uncrate laser [ ] Forklift or pallet jack capable of moving the fully loaded crate (77 kg/170 lbs.) [ ] Forklift or hoist capable of lifting the 61 kg (134 lbs.) laser off shipping pallet [ ] Cart capable of moving 61 kg (134 lbs.) laser to installation area	"Receive and Inspect" on page 3-5 "Unpacking and Inspection" on page 3-20
Laser Installation Area	[ ] Clear path to the installation site [ ] Forklift or hoist capable of lifting the 61 kg (134 lbs.) laser plus lifting hardware into tool [ ] Laser head mounting area prepared: able to support 61 kg (134 lbs.) laser system plus weight of cables, hoses, output aperture accessories, etc. [ ] Service access provided [ ] All connections reach laser head	"Laser Installation Area" on page 3-6 "Mounting Laser System Components" on page 3-24
Laser System Cooling	[ ] Chiller installed and operational (loop test OK) [ ] Coolant is a mixture of water and corrosion inhibitor [ ] 30 µm particle filter installed at laser head inlet [ ] Shut-off valves installed (optional, recommended) [ ] 3/8" minimum ID hose between the laser system and chiller [ ] Required flow rate, temperature set point and temperature stability capability verified	"Laser System Cooling" on page 3-6 "Coolant Composition" on page 3-8 Table 3-2 on page 3-8
Laser System Purge Gas	[ ] N_2 or filters installed to provide clean, dry air [ ] Shut-off valve installed (optional, recommended) [ ] Output fitting installed to accept 1/4" OD tubing [ ] Clean, flexible 1/4" OD tubing to connect purge gas supply to laser head	"Laser System Purge Gas" on page 3-10 Figure 3-4 on page 3-12
DC Power Supply	[ ] Rack w/shelf, bench or frame (mounting) prepared [ ] Electrical circuit with circuit breaker/fuse and electrical disconnect ready [ ] Mains input (electrical disconnect to power supply) power cable ready	OEM Product Literature (external document(s)) "DC Power Supply" on page 3-14

Table 3-1. Preinstallation Checklist (Continued)

ACTIVITY	GENERAL REQUIREMENTS	REFERENCE(S)
Beam Delivery System	[ ] Beam delivery system purge gas ready [ ] Optical Isolator installed (if cutting/marking reflective material) [ ] External optical beam delivery system meets optical specifications	"Beam Delivery System" on page 3-14
Laser Control, Measurement and Diagnostic	[ ] If using a Coherent DIAMOND Remote Controller, controller is available [ ] If monitoring laser diagnostics with a personal computer via network cable, a computer Ethernet cross-over cable is required [ ] For 3rd party controller, see OEM documentation [ ] Interlocks installed [ ] Suitable Power Meter and Detector Head available	"Laser Control, Measurement & Diagnostic" on page 3-16 and Section Four: Control Interfaces DIAMOND OEM/ Industrial Laser Remote Controller Operator's Manual, part number 1235412 (external document) "Power Meters and Sensors" on page D-1 of Appendix D: Accessories and Options in the operator's manual
Laser Safety	[ ] Laser Safety Officer (LSO) identified (recommended) [ ] Laser Safety Training completed [ ] Laser Controlled Area established [ ] Personal Protective Equipment (laser safety eyewear) available	"Laser Safety" on page 3-16 Section One: Laser Safety

Confirm Laser Environment

The laser must be installed and operated in a temperature and humidity-controlled environment. The operating temperature must be 5 – 45ºC (41 – 113ºF). The humidity must be 5 – 95%, non-condensing, for the laser system coolant inlet temperature. Operating altitude must be < 2,000 m (6,500 ft.).

Additionally, the laser environment should be clean and free of air-borne particles, and mounted such that forces acting on the laser are ≤ 1 G static acceleration and ≤ 0.2 G RMS vibration.

Since the laser and/or associated beam delivery systems may be nitrogen purged and the cutting/marking processes generally create noxious fumes, make sure to provide adequate ventilation for all operators in the area.

Operation in Humid Environments

The cooling fluid of the J-5V Series lasers can condense moisture from the air when the temperature of the cooling fluid is at or below the dew point of the air.

NOTICE!
The system must not operate in a condensing environment since this condition will lead to catastrophic failure in both the laser head and the RF power module. Doing so will void the warranty. It is the responsibility of the customer to ensure an J-5V Series laser system is never operated in a condensing environment. Failed laser heads and RF power supplies may need to be returned to the factory for repair.

Condensation may form on any component surface when the surface temperature is at or below the dew point of the air. The typical condition that leads to condensation is warm, humid weather combined with fluid that is cooler than the surroundings.

High risk conditions which are likely to lead to condensation are:

- Operating the laser in a room that is not air conditioned in high humidity environments
- Using cooling fluid that is not temperature controlled
- Leaving the cooling fluid system on for an extended period of time, when the laser is not operating

Risk of Condensation: The information required to determine if the cooling fluid temperature will lead to condensation is:

- Room temperature
- Relative humidity

Since weather conditions change, these factors need to be periodically checked especially in spring, summer, or wet seasons. In environments that are air conditioned, Coherent recommends setting the cooling fluid temperature to 23°C (73.4°F). For environments that are not air conditioned, Coherent recommends that the cooling fluid temperature be increased to the air temperature to avoid condensation in humid climates, but no higher than 26ºC (78.8ºF) and not less than 20ºC (68ºF). Whatever operating temperature is chosen, the water chiller used with the laser must hold that temperature to ± 1°C during laser operation.

Receive and Inspect

The J-5V Series laser system packaging has been designed for robust shipment. Upon receiving the system, inspect the outside of all containers immediately to ensure no damage occurred during transit. If there appears to be visible damage (holes in the containers, fluid damage, crushing, etc.), immediately notify Coherent and a representative of the carrier. Request that a representative of the freight company be present when unpacking the contents.

NOTICE!
Keep the original shipping containers and packing materials for transporting the J-5V Series laser system from one location to another. If the system is to be returned to Coherent for repair, it must be transported in the original shipping container.

The containers may appear to be in good condition, but the contents may be damaged. Inspect all major components as they are unpacked. Unpacking procedure instructions are found in “Installation” on page 3-17.

To unpack the laser system, at least two people and the following tools will be required:

- Scissors or a package cutting knife
- Forklift or pallet jack able to lift and move at least 77 kg (170 lbs.) - total weight of a fully loaded shipping crate
- Forklift or hoist capable of lifting the 61 kg (134 lbs.) laser system out of the crate
- Cart capable of supporting and transporting the 61 kg (134 lbs.) laser system to the installation area

NOTICE!
While in transit, the shipping container and its contents may be exposed to cold temperatures. To prevent condensation from developing on and within the laser system, move the crate to a location near the installation area and allow it to acclimate before unpacking the laser.

Laser Installation Area

It is assumed that the laser will be integrated into a laser cutting or marking tool designed and manufactured by a third party. Because each system installation is unique, only general guidelines will be discussed.

Service Access

It is highly recommended that the system integrator follow Coherent's recommendation for laser orientation with respect to service access within the customer's equipment (see Figure 3-10).

If placing the laser inside a cabinet or enclosure, make sure to design sufficient access to all lifting and mounting points. Additionally, make sure to provide adequate service clearance at the rear (interface connectors), the front (coupling to beam delivery system), and top and sides (to remove covers for service access). It is particularly important to ensure top and rear access since this will allow for easy replacement of the RF power module in the unlikely event of a failure.

- Mount the laser system with the RF power module readily accessible through service access panels.
- Provide easy access to all electrical and signal connections.
- Provide easy access to cooling and purge connections.

NOTICE!
Providing the recommended service access will provide ease and speed of service and repair of the J-5V Series laser system.

Also, consider the interface/connection point locations at the rear end of the laser system and the length of cables, hoses, and tubing, including service loops, when placing the DC power supply, chiller, and control system.

Laser System Cooling

The J-5V Series laser head and the RF power module require a continuous flow of constant temperature cooling fluid. Because the properties of the cooling fluid are important for laser performance, ensure that the conditions remain within the tolerance limits listed in Table 3-2 on page 3-8 at all times.

A closed-loop cooling system (chiller) should be used to obtain consistent and stable laser performance. The chiller must be able to remove up to 4.5 kW kW of heat, or slightly more if environmental heat must be removed during use. The coolant composition for the closed-loop chiller is described in the following section.

A typical flow diagram is shown in Figure 3-1. The delivery system and/or laser power detector may be connected in parallel auxiliary loops as long as they do not reduce the required flow to the laser, or they may be cooled by a separate chiller.

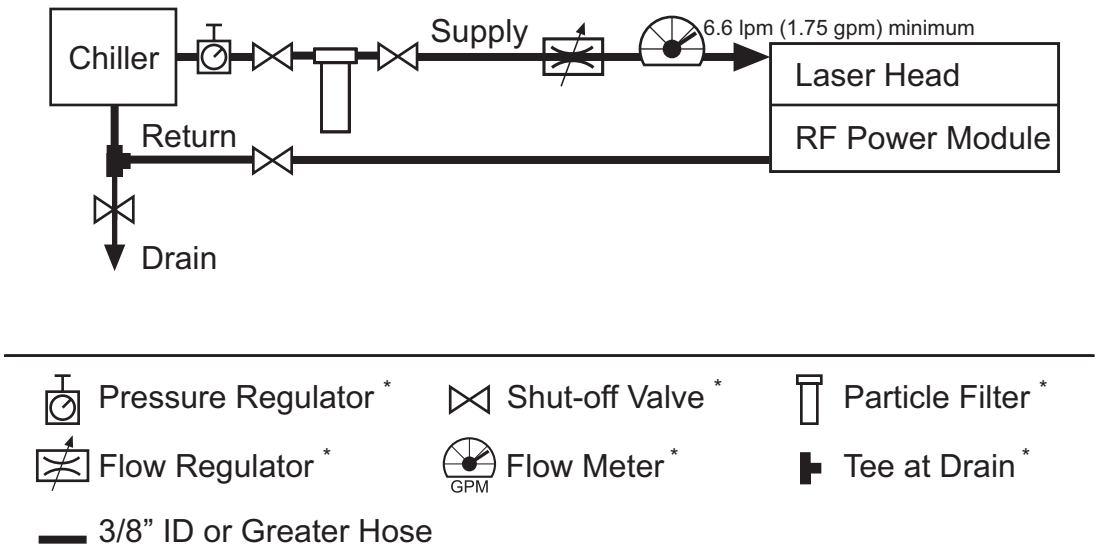

Figure 3-1. Coolant Flow Diagram

Coolant Temperature

At the laser head, the inlet temperature of the cooling fluid should always be above the dew point to prevent condensation from developing inside the laser head or RF power module.

Coolant Filtering

To prevent accumulation of debris in the cooling system, the coolant should be filtered at the inlet to the laser system.

Coherent recommends the use of hose with an ID of 3/8” (10 mm) or greater to minimize the pressure drop from the chiller to the laser system. Do not exceed the maximum hose length specified by the chiller manufacturer.

A suitable water filter should be connected as shown in Figure 3-1 on the input water line from the chiller.

Shut-off valves on the supply and return lines are recommended to facilitate maintenance to the cooling system filters and laser system.

Coolant Composition

The required coolant composition is a mixture of clean distilled or deionized water containing a low toxicity corrosion inhibitor. THE USE OF CORROSION INHIBITOR IS MANDATORY IN THE J-5V LASER. Coherent have tested two different solutions that will prevent corrosion within the laser coolant circuit.

These are described in Table 3-2:

Table 3-2. Recommended Coolant for J-5V Series Lasers

Product Name	Manufacturers Name and Contact	Heat Transfer Fluid Type	Required Heat Transfer Fluid Content	Freezing Burst Protection	Other Precautions
Optishield	OptiTemp. Inc. www.optitemp.com US/Canada 231-946-2931	Corrosion Inhibited Water	10% solution in water	Does not reduce the water freezing point	Use may be restricted in geographical locations outside the US
TRAC100	Nalco Inc. www.nalco.com US 630-305-1000	Corrosion Inhibited Water	2500 ppm in water (2.5 mL per liter of water)	Does not reduce the water freezing point	Use may be restricted in geographical locations outside the US

Failure to provide adequate cooling to the laser will result in unstable operation, potential failure and will void the warranty.

Figure 3-2 shows system components from water circuits treated with inhibitor and a water circuit without inhibitor.

Untreated Water Circuit

Treated Water Circuit

Figure 3-2. Water Circuits - Untreated and Treated

Freeze/Burst Protection

The recommended coolant mixture does not provide freeze protection; therefore the coolant temperature must be maintained above the freezing point of water. Since lower temperatures may occur during shipment and storage, the DIAMOND J-5V Series laser system (or separate laser head or RF power module components) should never be stored or transported unless the coolant has been completely removed by using a compressed air supply to blow out all coolant passages.

NOTICE!
Never store or ship a complete J-5V Series laser system or laser head or RF power module with coolant installed, as the coolant may freeze and cause permanent internal damage. Always remove the coolant prior to storage or shipment by using a compressed air supply to blow out all coolant passages. Plug or cap coolant inlet and outlet fittings after draining to prevent residual coolant leaks during storage or shipment. Damage to the laser during storage or shipment, as a result of failure to remove coolant and plug the inlet and outlet fittings after coolant removal, is specifically excluded from the product warranty.

Flow Direction

The coolant inlet and coolant outlet are clearly marked. It is critical that this coolant flow direction is established to ensure the proper operation of the laser system.

If any other components are included in the cooling loop, they must not reduce the coolant flow to the laser head, and any heat absorbing/generating components must come after the laser system.

Chiller Electrical Supply

A large industrial chiller normally requires a 230 or 480 VAC, 3-phase electrical supply with its own circuit breaker or fuse protection and an electrical disconnect. Refer to the chiller manufacturer's installation guide for electrical requirements and installation instructions.

Chiller Electrical Disconnect

It is recommended that the chiller have a main power disconnect to electrically isolate it from mains power for maintenance and service. Consult a qualified electrician to select and install this hardware. A typical disconnect switch with fuse protection is shown in Figure 3-3.

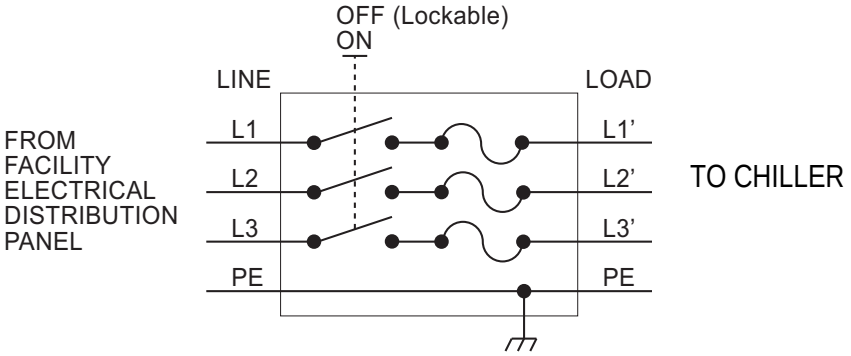

Figure 3-3. Chiller Electrical Disconnect Switch (with Fuse Protection)

Laser System Purge Gas

NOTICE!
The use of purge gas is required. It will extend the life and reduce cost of ownership of the J-5V Series laser systems.

The quality of the purge gas is extremely important factor for trouble free operation of the laser. While the preferred purge gas is nitrogen with a purity of 99.95%, clean dry air (CDA) is also acceptable.

J- Series lasers are used in a wide range of material processing which often has by-products of dust, smoke, fumes, oil, and various gases. These by-products can cause contamination of the laser head optics as well as the beam delivery optics and electronic components. Contamination will severely degrade the system performance and can lead to damage or failure of sensitive components.

Passing a purge gas through the laser head and RF power module can prevent component damage by creating an internal positive pressure. Also under some conditions of high humidity, the laser beam can be distorted by optical absorption of the laser beam by fluid vapor. This effect can be totally eliminated by use of a proper gas purge.

Delivery System Purge Gas

The purge gas fills the laser enclosure and RF power module and slowly leaks out of small gaps between enclosure covers. The gas purge to the laser head exits primarily via the beam output aperture. While this is the primary exit path for the purge gas, small gaps in the interfaces between the components comprising the protective housing result in additional purge exit paths. Therefore, the user should not rely on purge gas exiting the beam output aperture to provide purge gas to the user's beam delivery optics. A separate purge should be used for external beam delivery optics.

Threaded holes in the output end plate provide a convenient means to connect the user's beam delivery optics while maintaining a gas seal at this interface.

NOTICE!
Do not rely on purge gas exiting the beam output aperture to purge the external beam delivery optics. A separate purge line should be used to purge the external beam delivery optics.

If a shared purge gas supply is directed to both the laser system and the beam delivery system, make certain the supply and supply line are properly sized to provide an adequate flow rate to the laser system.

NOTICE!
Other inert gases such as argon (Ar) must not be used. Use of inert gases will result in damage to the RF power module and associated matching network components. Only nitrogen or compressed air as described below should be used as a purge gas.

Guidelines for Use of Compressed Air for Purge

If nitrogen is not available, the alternative is clean, dry, oil-free compressed air. Compressed air is available in many facilities but typically is contaminated with water and oil vapors. The purity requirements for the compressed air are:

1. Filtered to remove particles larger than 1 micron.
2. Dried so that dew point is 10°C (18°F) lower than the inlet cooling fluid temperature to the J-5V Series laser.
3. Oil free to better than 99.995%.

Recommended purge gas configurations are shown in Figure 3-4.

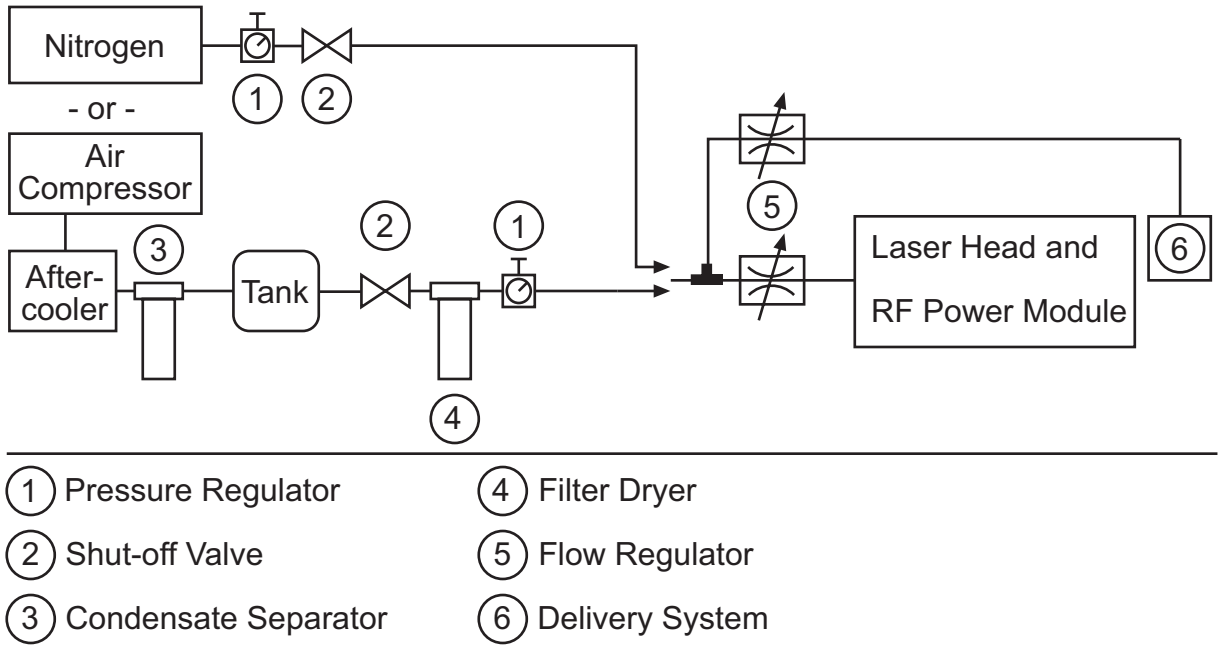

Figure 3-4. Purge Gas Diagram

Coherent has identified a suitable dry air purge filter which filters to 0.1 microns and dries the air to a dew point of - 40°C (- 40°F). The filter is shown in Figure 3-5 and is widely available.

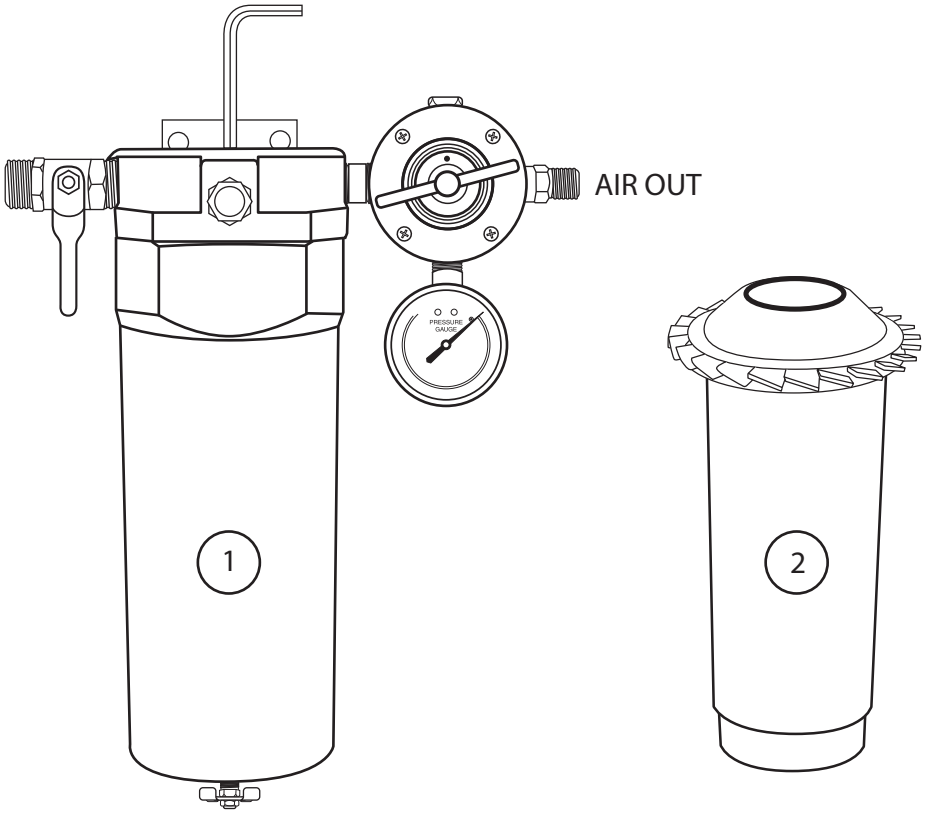

1. Air Purge Filter Assembly; Part Number: 1232642
2. Replacement Desiccant Filter Cartridge; Part Number: 1236040

Figure 3-5. Air Filter Dryer Unit

For additional information on the Air Filter Dryer Unit, refer to “Air Filter Dryer Unit” on page D-2 in the operator’s manual.

NOTICE!
It is the responsibility of the customer to provide purge gas of either nitrogen or compressed air that meets the specifications stated above, and clean flexible tubing to carry the purge gas. Failure to comply with these specifications will void the warranty and the customer is responsible for all cost of repair or damage to the laser.

See “Preventive Maintenance” on page 6-1 in Section Six: Maintenance and Troubleshooting in the operator’s manual for the routine maintenance required for the purge gas filters.

DC Power Supply

Coherent has qualified several DC power supplies for use with the J-5V Series laser systems. Contact Coherent for the current list of qualified supplies. While Coherent stocks some of these supplies for the convenience of our customers, we encourage the direct purchase of these supplies from the DC power supply manufacturer.

Coherent can provide the DC power cables that connect the DC power supply output to the + 48 VDC and 48 VDC return terminals on the RF power module (see Figure 3-11). These cables come with standard cable terminals.

DC Power Supply Electrical Service

Consult the instruction manual provided by the DC power supply manufacturer for electrical service requirements. Also, consult local electrical codes to determine the current rating for fuses or circuit breakers for the electrical service to the power supply.

DC Power Supply Electrical Disconnect

All recommended supplies require an electrical disconnect to reset faults and to provide a disconnect for service. Coherent recommends that a main power disconnect (to the DC power supply) be located in the same room as the laser system. Consult a qualified electrician to select and install this hardware.

Mains Power Cord

The integrator must provide the AC mains cable of suitable size (gauge) for the chosen length and current carrying requirement. Depending upon local electrical code, the power cord may need to be hard-wired into a junction box or electrical disconnect switch, or may be connected to mating plug and receptacle. Consult a qualified electrician and wire to local electrical code.

Beam Delivery System

The beam delivery system is typically designed and built by the system integrator.

Verify that the beam delivery system is designed for the J- Series laser beam specifications: wavelength, beam diameter, power density, divergence, output beam height (with respect to base-plate), mirror cooling, etc.

Shutter (Optional)

If the laser is equipped with the optional internal shutter assembly, a red (visible) aiming laser is provided whenever 48 VDC is on and the shutter is closed. This aiming beam serves as a visual indicator of the process beam path, and can be used to align the beam delivery system. This optional internal shutter is intended to be a safety device - it is not to be used as a process shutter.

If the optional internal shutter assembly is not installed, it is recommended to provide an external safety shutter or beam block near the laser aperture to prevent laser exposure when servicing the delivery system. Make sure the beam block is made of suitable material to safely trap and dissipate the laser power.

Accessory Coupler

The laser head output aperture provides accommodation for up to a 50 mm (2”) OD beam tube to couple to the laser head. Enclosing the beam within gas-purged metallic tubes is a safe and recommended method of transmitting the beam from the laser head to the work piece.

Purge

Providing a constant flow of purge gas to the delivery optics is recommended to keep optical surfaces clean and moisture free. If sharing a purge gas supply between the laser and deliver system, make certain that the laser system purge gas flow rate is maintained at the specified volume. See “Laser System Purge Gas” on page 3-10.

NOTICE!
If cutting or marking reflective materials, an optical isolator must be installed between the laser and the process material to prevent work piece reflections from returning to the laser head.

Optical Isolation

An optical isolator must be installed between the laser and the process material if cutting or marking reflective materials. This must be done to prevent work piece surface reflections from returning to the laser head.

Coherent has qualified the optical isolators listed in Appendix D: Accessories and Options in the operator’s manual for use with the J-5V Series laser systems.

Laser Control, Measurement & Diagnostic

The main interface for control and status is the Real Time Control and Status Interface. Safety interlocks, shutter control and shutter status are available on the Extended Interface Connector.

Detailed description and interface methods are discussed in Section Four: Control Interfaces. If a third-party or customer-designed controller is not available, Coherent has a DIAMOND Remote Controller available as an option.

Regardless of which control method is used, the laser requires that an external interlock (user supplied) be satisfied (closed) for operation. It is highly recommended to incorporate a serial interlock loop consisting of switch contacts on all service access doors and panels, and interlock switches or light curtains on all material access gates and doors.

Laser Power Measurement

To accurately measure delivered laser power, a calibrated optical power meter (detector head plus display console) is necessary. Liquid (water) cooling is generally required for the detector head at J-5V Series power levels. Make sure to provide adequate cooling for the detector head.

Coherent manufactures a wide range of power meters (display consoles and sensor heads). Refer to Appendix D: Accessories and Options in the operator's manual for recommended measurement tools.

Laser Safety

Safety First! Read and understand the contents of Section One: Laser Safety. Accidents can generally be reduced or eliminated by following all recommended safety guidelines.

Coherent recommends that each facility appoint and train a Laser Safety Officer (LSO) responsible for overseeing all aspects of laser safety.

Design systems with safety in mind. Use engineering controls such as: enclosed beam paths, interlocked covers, and safety shutters.

Designate a laser controlled area and keep all untrained and non-essential personnel out. Provide beam blocks, light shields, and/or curtains, as required, to establish a controlled area.

Insist that all operators and maintenance personnel receive proper training (and re-training) in laser and electrical safety. Require all personnel to have appropriate Personal Protective Equipment (PPE), especially laser safety eyewear suited to the laser in use and the job at hand.

Installation

The installation procedure consists of performing the following steps:

1. Prepare facility and ensure that all items listed in Table 3-1 are satisfied.
2. Receiving and unpacking the shipment.
   - Allow the laser system temperature to acclimate to local room temperature.
   - Remove laser, DC power supply, loose parts, and accessories from shipping crates.
   - Inspect system components.
3. Mount the laser system and the DC power supply.
4. Connect optics purge gas line and perform a laser system purge (mandatory).

NOTICE!
Damage to internal optical components may occur if the laser is not purged prior to use, and this damage is NOT covered by the laser warranty.

---

5. Connect the coolant lines and turn on the water supply. Monitor connections for 5 minutes and make sure there are no leaks.
6. Connect the electrical cables from the DC output terminals to laser input terminals and from the main AC supply to the DC supply input terminals.
7. Remove the output aperture cover and couple beam delivery system to the laser head output aperture.
8. Connect a laser controller in accordance with the chosen control method for this installation.

Required Tools

The following tools will be required to unpack and install the laser system:

- Scissors or a package cutting knife
- Forklift or pallet jack to lift 77 kg (170 lbs.) - the weight of a fully loaded shipping crate
- A hoist capable of lifting at least 61 kg (134 lbs.) - the weight of the laser system
- A cart capable of supporting and transporting at least 61 kg (134 lbs.) - the weight of the laser system
- Metric hex wrench set (Allen keys)
- 1/4” flat-blade (–) screw driver
- #1 Phillips (+) screw driver
- Roll of 1/2” wide Teflon tape (included in coolant filter kit)
- Two 9/16” open end wrenches (or 8” adjustable wrenches)
- Two 3/4” open end wrenches (with width of 1/4” or less)
- Common hand tools

Required Parts and Equipment

Table 3-3 lists parts and equipment required to perform the installation. Note that some items may have been purchased and supplied in the laser shipment while others must be obtained locally.

Table 3-3. Parts and Equipment Required for Installation

ITEM	QUANTITY	PURPOSE	AVAILABLE FROM COHERENT?
+ 48 VDC power supply	1	Provides + 48 VDC power to the RF power module and the laser head.	Yes
AC power cord for DC power supply	1	Connects AC electrical supply to DC power supply input	No
Electrical disconnect for DC power supply	1	Disconnects power cord (to DC power supply) from AC electrical supply; can be mating plug/receptacle (if allowed by local code), or panel mounted disconnect	No
DC power supply cables	2 each 3 m (10 ft.) in length	48 VDC cables Qty. 2, 1/0 AWG cables (1 red & 1 black) Supplies 48 volts to RF power module.	Yes

Table 3-3. Parts and Equipment Required for Installation (Continued)

ITEM	QUANTITY	PURPOSE	AVAILABLE FROM COHERENT?
Liquid-cooling System/Chiller	1	Provides temperature regulated liquid coolant to laser system	No
Coolant kit	1	Filters particles from coolant - 30 micron or better 3/8” male NPT to male GHT (garden hose thread) 3/8” male NPT to female GHT (garden hose thread) Coolant hoses Coolant kit contains particle filter, fittings and coolant hose required to provide coolant to the laser system from the liquid-cooling system (specific to laser order)	Yes Optional PN 1264189 Coolant Kit
Coolant	Amount varies	The heat transfer medium used to remove heat from the laser system; consists of a mixture of distilled (or de-ionized) water and corrosion inhibitor	No
Corrosion inhibitor	Amount varies	Prevents corrosion of metal parts in contact with the coolant	No
Purge Gas (Regulated Supply)	1	Used to displace atmosphere of air within the laser head and the RF power module; typically N_2 or clean, dry air (CDA)	No
Purge Gas Filter	N/A if using N_2; required if using CDA	Removes water vapor and particulates from compressed air; see Appendix D: Accessories and Options in the operator’s manual. Supplied with laser if purchased.	Yes Optional 1232642: Purge Gas Filter Assembly 1236040: Replacement filter cartridge
Purge Gas tubing (between purge gas supply and laser system)	as required	1/4 inch (6 mm) OD Teflon, polyethylene or polypropylene tubing to connect the purge gas supply to the laser head	No

Facility Preparation

Prepare the facility (installation site) as described in Table 3-1 on page 3-2.

Unpacking and Inspection

The J-5V Series laser system packaging has been designed for robust shipment. Upon receiving the system, inspect the outside of all containers immediately for damage that may have occurred during transit. If there appears to be any visible damage (holes in containers, fluid damage, crushing, etc.), immediately notify Coherent and a representative of the carrier. Request that a representative of the freight company be present when unpacking the contents.

NOTICE!
Keep the original shipping crates, lifting hardware and packing materials for shipping the J-5V Series laser system from one location to another. If the system is to be returned to Coherent for repair, it must be in the original shipping container.

Carefully unpack the crate in a clean, dry area. Inspect all major components as they are unpacked.

DANGER!
The J-5V Series laser system is not designed to be lifted or carried by hand. Always lift, move, and place the laser using equipment approved for lifting and properly rated for the weights listed. To avoid personal injury, never place any body parts below a lifted or suspended laser.

Unpacking Instructions

This section contains photos representative of unpacking a typical J-5V Series laser system. There are two optional methods for unpacking. Option One uses the forklift method and Option Two uses the eyebolts (found in the accessories packet) to lift the laser out of the box. Please note that some laser models may be packed differently.

Option One: Forklift Method

1. Cut and remove any/all banding that holds the box(es) to the skid.

NOTICE!
If the laser system is significantly below room temperature, it is recommended that the laser system equilibrate to room temperature before removing it from its shipping container.

---

2. Remove the top cover of the box and remove the foam (Figure 3-6).

Figure 3-6. Top Cover Removed

3. Unfold the side of the box.

4. Fold down the front side of the box. Insert fork-type lifting device between the laser and the box, then lift the laser out of the box (Figure 3-7).

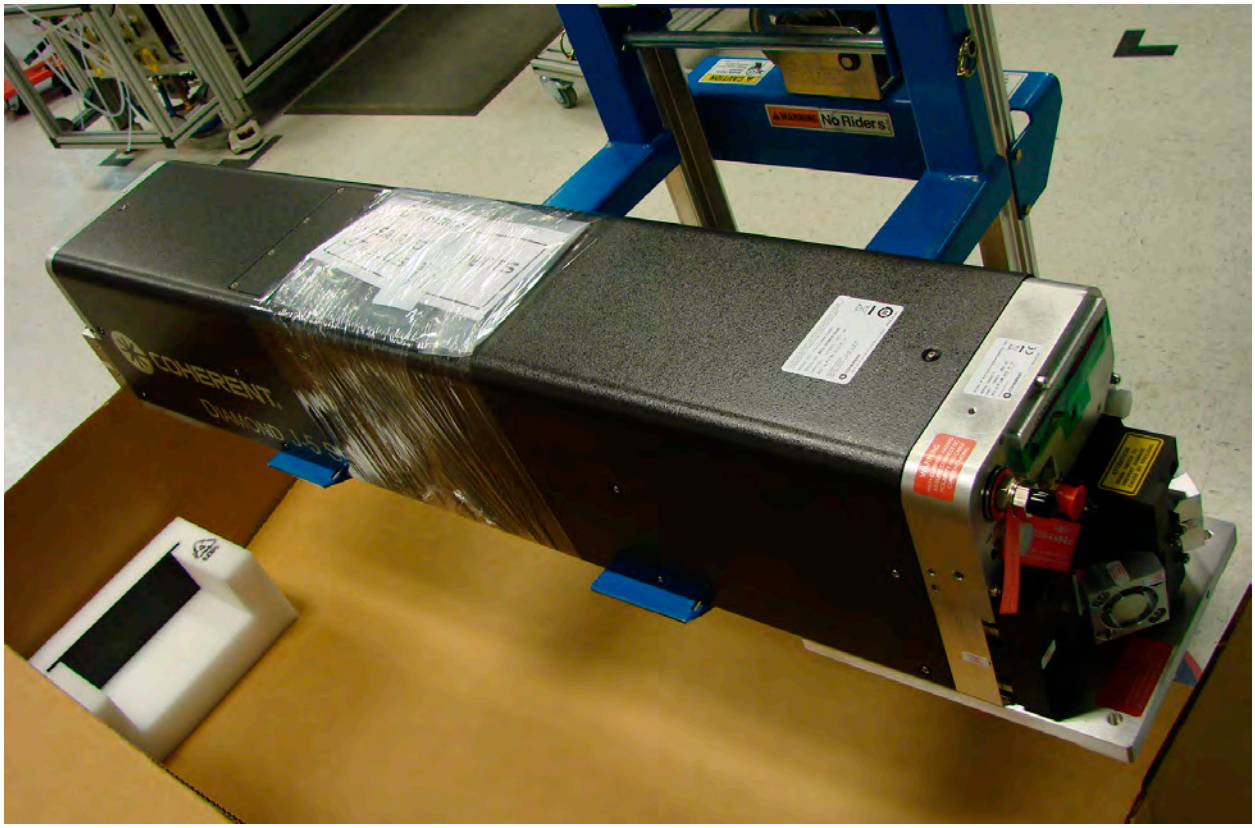

Figure 3-7. Lifting the Laser

Option Two: Eyebolt Method

1. Follow step 1 through step 3 in the forklift method.
2. Locate and remove user documents and lifting eyebolts from the accessories bag.
3. Insert the supplied eyebolts into the holes as shown in Figure 3-8.
4. Attach a lifting bar to the eyebolts and lift the laser out of the box.

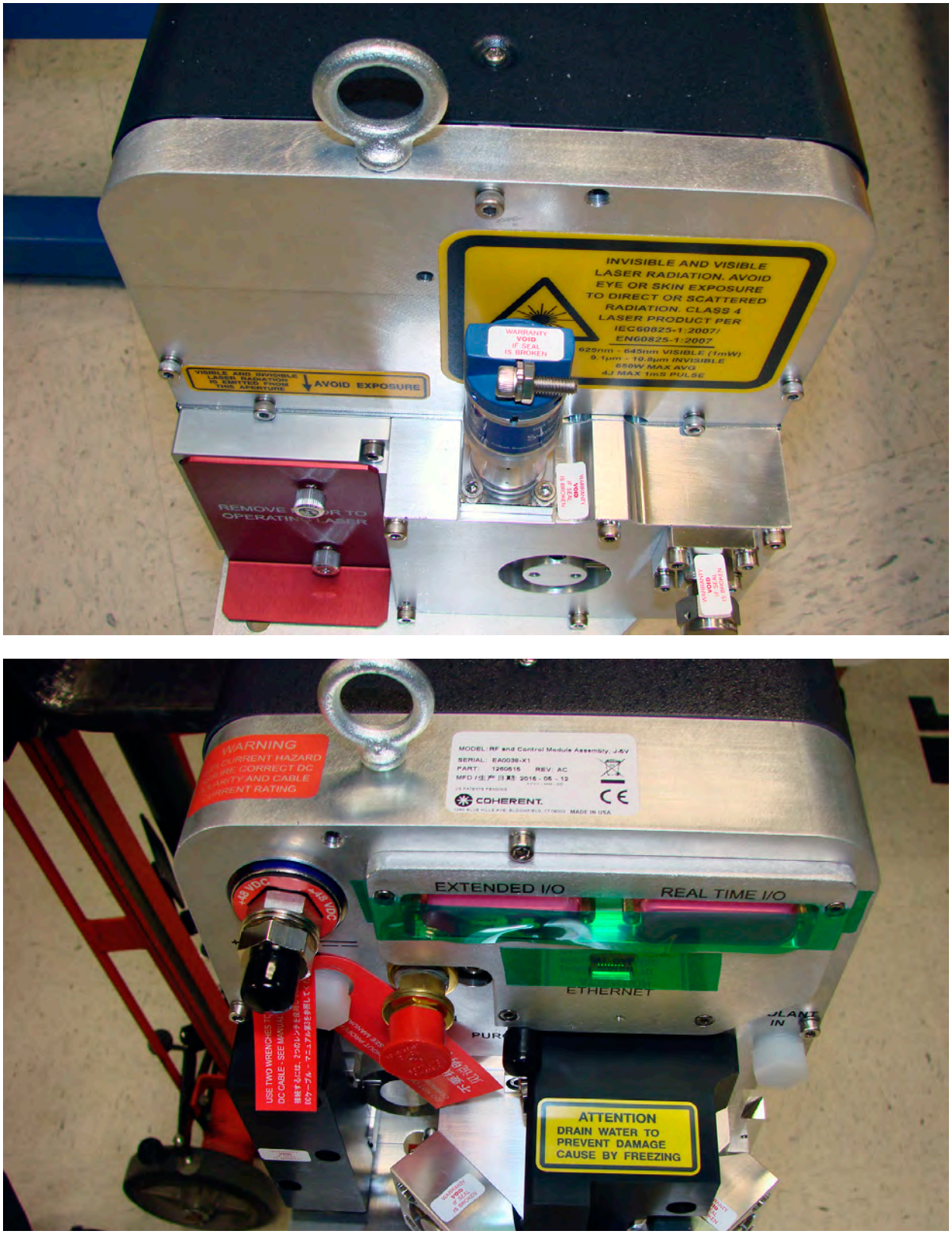

Figure 3-8. Eyebolts Installed in Laser System

Mounting Laser System Components

Figure 3-9 The output beam end of the laser should be allowed to float axially relative to the rear mounting bolts. This is why the mounting foot at the front of the laser has a slot for the dowel pin rather than a tight-fitting hole. Typically, this floating type of fixture would be best achieved by use of a spring such as a Belleville washer under the clamping bolt head and reducing the torque applied to this mounting bolt to lessen the constraining friction at this mounting location.The torque used should be the minimum acceptable for the machine dynamics associated with your configuration.

NOTICE!
Torque specification for the M8 X 35 mm mounting bolts is 20 N·m (177 in.-lb). Do not over torque.

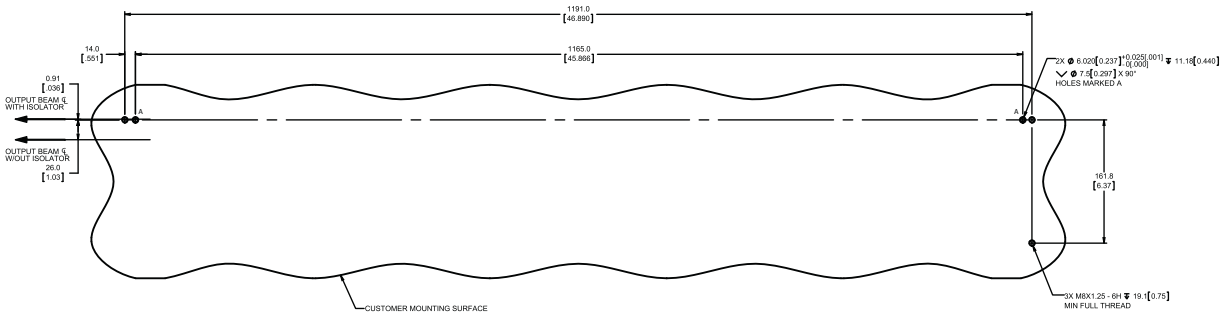

Figure 3-9. J-5 System Installation in OEM Equipment

Set-up Purge

Purge is required in order to eliminate moisture from the system prior to use. This is required even though the system packaging is designed to ship the laser in a ‘dry condition’. Note that system purge is required whenever the system has been off for an extended period of time without purge.

Purge the system with nitrogen or clean, dry air for a minimum of two hours. Failure to purge the system leaves the system at substantial risk of optics failure. Guidelines for system purge are found in “Laser System Purge Gas” on page 3-10.

Service Access

It is highly recommended that the system integrator follow Coherent's recommendation for laser orientation with respect to service access within the customer's equipment (see Figure 3-10):

- Mount the laser system with the RF power module readily accessible through service access panels in OEM's system.

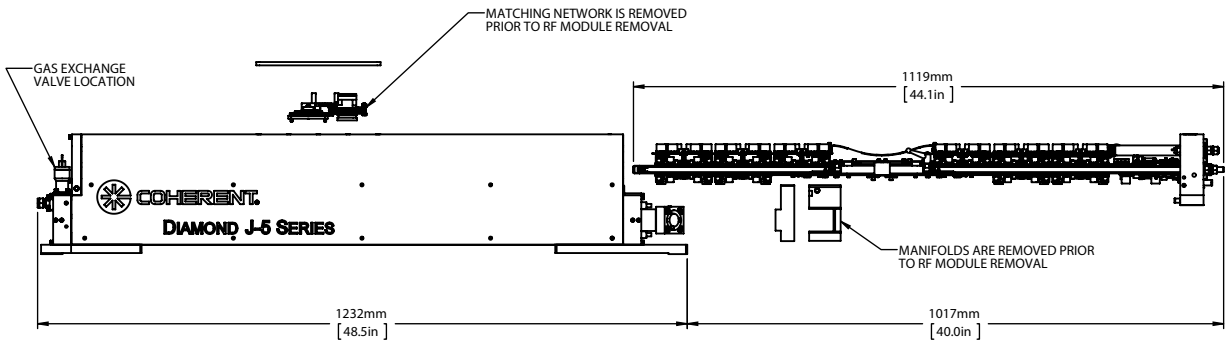

Figure 3-10. J-5 System Service Access

- Provide easy access to electrical connections:
  - Control interface
  - Diagnostic interface
- Provide easy access to cooling connections
- Provide easy access to the optics purge gas connection
- Provide easy access to the gas valve and gas port connection to allow for annual gas exchange

NOTICE!
Following these recommendations will provide ease of service for J-5V Series laser systems.

Vertical and Side Mounting

Coherent recommends the normal horizontal mounting orientation at this time for optimal performance and proven, long-term laser reliability. We recommend that alternate mounting schemes be discussed with Coherent prior to proceeding with such a design.

Customer Mounting of Attached Accessories

J-5V Series lasers have a provision for the customer to mount optics/accessories via the laser front plate. The following provisions must be followed:

- Accessory mount maximum load: 2.3 kg (5 lbs.) at 254 mm (10 in.) or equivalent.
- The customer must provide a continuation of optical purge through the added components using a separate purge line, or by splitting and regulating an existing purge line to provide good flow to both laser and beam delivery components.

Coolant Line Connections

The direction of fluid flow is first into the laser head module and then through the RF power module (see Figure 3-11).

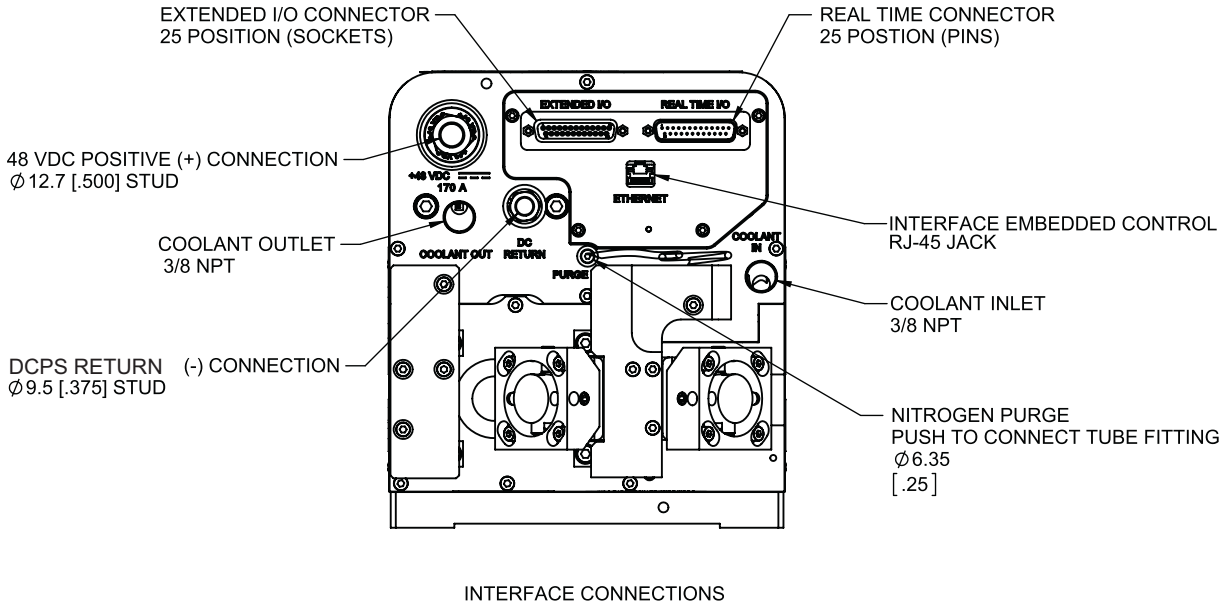

Figure 3-11. Interface Connectors End View

Table 3-4. J-5V Head Indicators and Connectors

CONTROL	FUNCTION
Output Aperture	The output beam exits the laser head from this aperture.
Nitrogen Purge	Provides for the mandatory gas purge of the beam conditioning optics. Requires 1/4 inch (6.3 mm) OD Teflon, polyethylene or polypropylene tubing. Standard gas fitting for purging the optics in the laser head. Nitrogen is not required for tube operation. Refer to “Laser System Purge Gas” on page 3-10 for additional information on purging the laser head.

Table 3-4. J-5V Head Indicators and Connectors

CONTROL	FUNCTION
Coolant Inlet	Connection for the cooling fluid hose that supplies coolant from the coolant source.
Coolant Outlet	Connection for the cooling fluid hose. Cooling fluid travels from the laser head through the RF power module and out to the drain.
48 VDC Positive (+) Connection	Connects + 48 VDC from the DC power supply to the RF power module. Apply in.-lbs. (N·m) torque to nut supplied using two wrenches.
DCPS Return (–) Connection	Connects the RF power module DC Return to the DC power supply. Apply in.-lbs. (N·m) torque to nut supplied using two wrenches.
Real-time Connector	Connector for a DB25 interconnection cable. This connector supplies control and input modulation signals from the user to the RF power module and supplies status information from the laser system.
Interface Embedded Control	LAN connector for diagnostics and troubleshooting.
Extended I/O Connector	DB25 connector that provides extended capability (including shutter control and additional fault signals).

NOTICE!
To avoid damage to the J-5V, the coolant inlet and outlet must always be connected as specified.

The recommended coolant source is a closed-loop cooling system. Coolant composition must meet the requirements stated in Table 3-2 on page 3-8. Refer to “Laser System Cooling” on page 3-6 and for additional information.

The recommended minimum cooling hose ID is a 3/8 inch (9.5 mm).

After connecting the water hoses, verify that there are no water leaks as follows:

- Close supply and return valves, then turn the chiller on.
- Open the valve in the water return (drain) line.
- Slowly open the valve in the water supply line.
- With the water supply pressure and water line differential pressure in accordance with Table 3-2 on page 3-8, check all connections for leaks.

+ 48 VDC Cable Connection

The + 48 VDC cable from the DC power supply is to be connected to the + 48 VDC marked connector on the rear panel. This is a special filtered connector that passes DC current but blocks RF emission. As illustrated in Figure 3-12, it is important that the user make this connection using two wrenches to prevent damaging the connector.

It is critical that the polarity of the DC connections are not reversed. If power is applied with the polarities reversed, the RF module will be severely damaged requiring complete replacement.

NOTICE!

When connecting the DC power supply's + 48 VDC cable to the laser's + 48 RF filtering connector, use two wrenches to prevent damaging the connector.

Never connect the DC supply's cables to the laser with their polarities reversed. Applying power under this condition will severely damage the RF module.

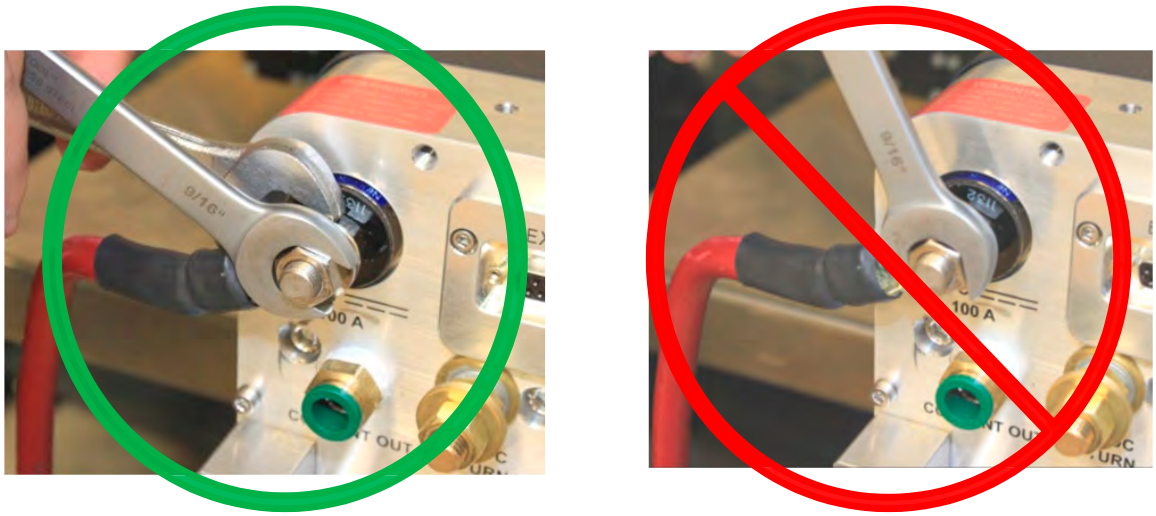

Figure 3-12. Using Two Wrenches

DC Return Cable Connection and Optional Grounding of RF Module

The J-Series RF module DC Return is internally grounded directly to the chassis ground of the laser system. The DC Return power supply cable from the DC power supply is to be connected directly to the marked connector on the rear panels, see Figure 3-11 on page 3-26. As in the case of the + 48 VDC connector, it is recommended that two wrenches be used to connect the DC Return cable to the DC Return terminal.

The DC Return can also be connected to the side of the laser system using a M8 bolt, as shown in Figure 3-13. This alternate DC Return connection location may be more convenient if this side of the RF module is accessible.

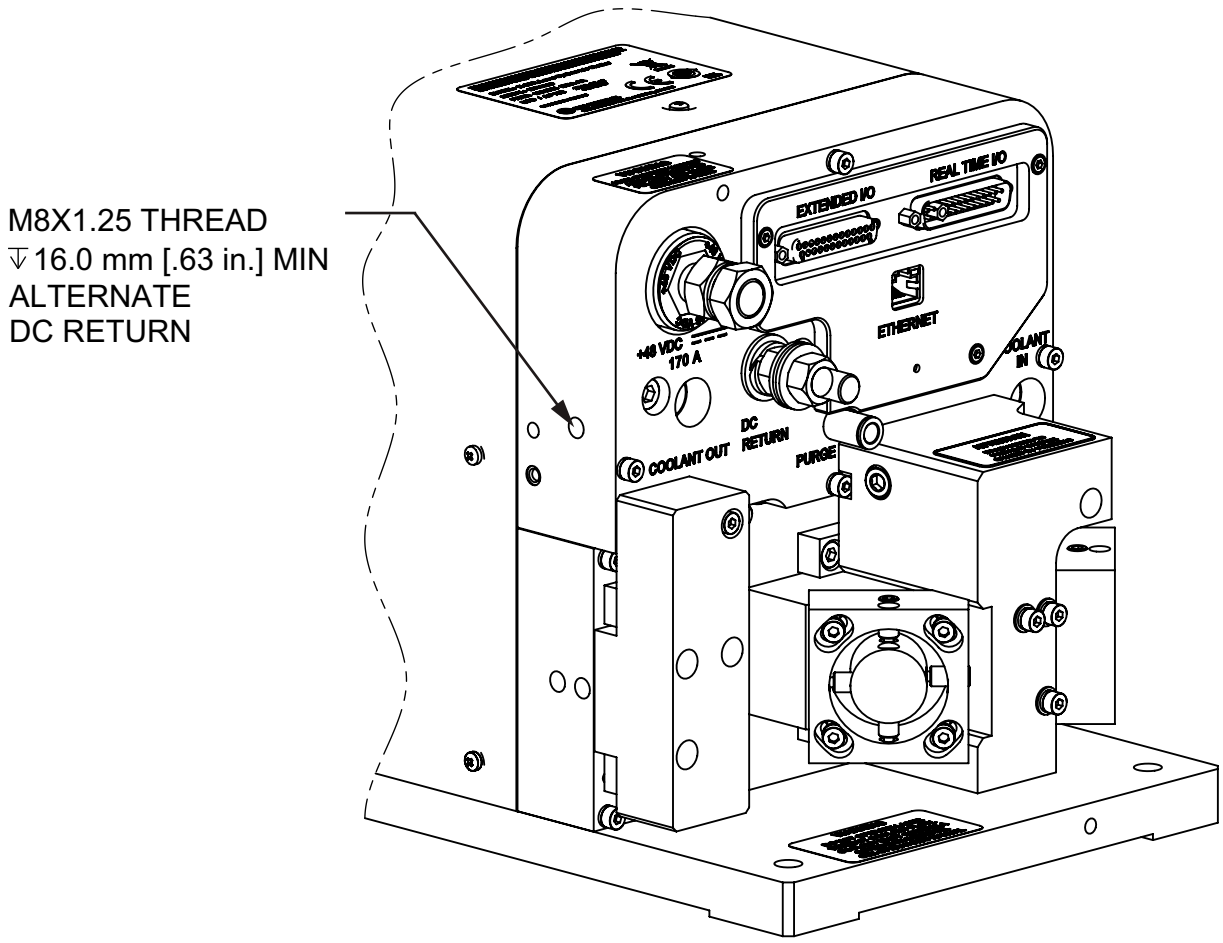

Figure 3-13. Alternate DC Return Connection Location

These connections ensure correct grounding for the system. As an added precaution, an additional safety ground may be configured using a direct connection to the DC Return terminal at the laser. Under no circumstance should earth ground be connected to the DC Return terminal of the DC power supply. Please refer to Figure 3-14.

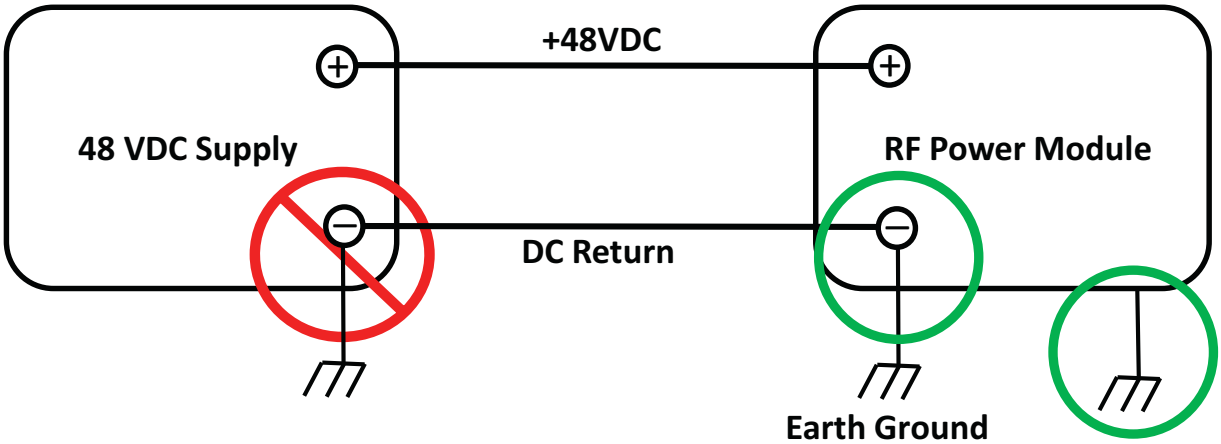

Figure 3-14. Grounding of J- Laser RF Module

WARNING!
Never connect a safety (earth) ground to the DC Return terminal of the DC power supply. This terminal's potential will rise above safety (earth) ground potential due to current flow through the return cable. The DC Return terminal of the DC power supply is electrically isolated and must always be allowed to float above safety (earth) ground potential.

Optics Purge Connection

To connect the optics purge gas use clean polyethylene, polypropylene or Teflon tubing. A 1/4 inch outside diameter tube fitting is provided on the laser head for connecting the optics purge gas. The purge gas at this input must meet the requirements discussed earlier in this section.

SECTION FOUR: CONTROL INTERFACES

Introduction

This section describes the electrical interfaces required to operate J-5V Series lasers. As shown in Figure 4-1, there are three control interfaces for the J-5V Series consisting of:

1. Real time I/O
2. Extended I/O
3. Embedded diagnostic interface

Figure 4-1 and Table 4-1 provide a brief description of these interfaces and manual locations providing complete information. Also, Table 4-1 provides a description of the LED indicator. Critical signals, which control laser power, are the pulse width and pulse period. Typical laser output power for various operating pulse widths and periods is shown in Section Five: Operation in the operator's manual.

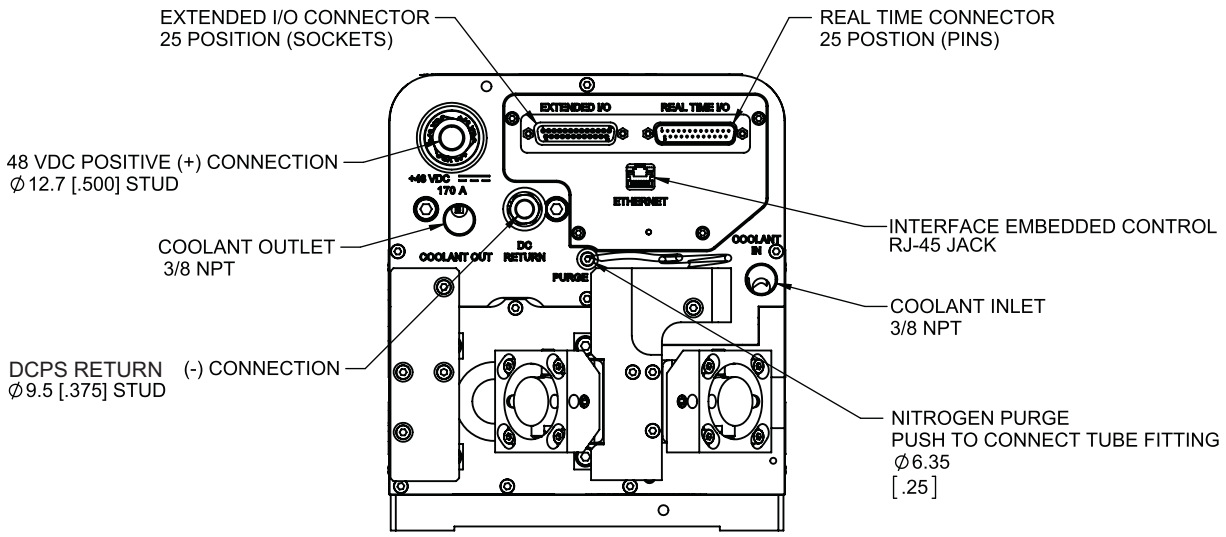

INTERFACE CONNECTIONS

Figure 4-1. J-5V Series Laser Electrical Interfaces

Table 4-1. J-5V Series Laser Electrical Interfaces

INTERFACE OR INDICATOR	DESCRIPTION	OPERATOR'S MANUAL SECTION
Real-time Control and Status I/O	DB-25 connector (male) Similar to existing K series OEM interface (see differences in Table 4-2).	Table 4-3 on page 4-5 and Table 4-4 on page 4-6
Extended I/O	DB-25 connector (female). Contains shutter interface signals and status, interlocks, low speed faults, and system warning.	Table 4-7 on page 4-20 and Table 4-8 on page 4-21
Interface Embedded Control	RJ-45 LAN connector Remote diagnostics and status information.	Appendix A: Embedded Diagnostics in the operator's manual
Power Indication LED	Green emission indicates DC power is on (48 VDC). Located on Ethernet connector.	Figure 4-1 (above)

Real-time Control and Status Interface

For users familiar with K-Series OEM lasers, the real time control and status interface is very similar to the K-Series interface, but it is not identical. Table 4-2 provides a concise description of the differences between both interfaces.

Table 4-2. Differences in Real-Time Interface Between K Series OEM and J-5V Series

STATUS OR CONTROL	K-SERIES OEM	J-5V
Faults	K-Series OEM lasers will resume operation upon correction of fault condition.	J-5V Series latching faults require a system reset in order to resume operation.
Enable/Fault Reset Signal (Pin #3 and #16)	Required for operation.	Enable: Required for operation. Enable must be asserted *after* system 48 VDC power-up, and it is suggested that this ENABLE not be used or cycled with the normal laser parts processing during the day. This is primarily because of the potential delay of the simmer initialization. Fault Reset: Required for system reset in the case of a fault condition.
System Fault (Pins #4 and #17)	N/A	This (added) signal indicates a latching system fault. Signal is high speed and the system fault asserts within microseconds of the laser being shut off.
Test Modulation Function	Pins 5 and 18	Not available.

Fault Types

One key difference between the K-Series and J-Series products highlighted in Table 4-2 is how faults are handled and different types of faults, such as Terminal and Latching. Provided is a detailed definition and description of the J-5V Series faults as illustrated in Figure 4-2 .

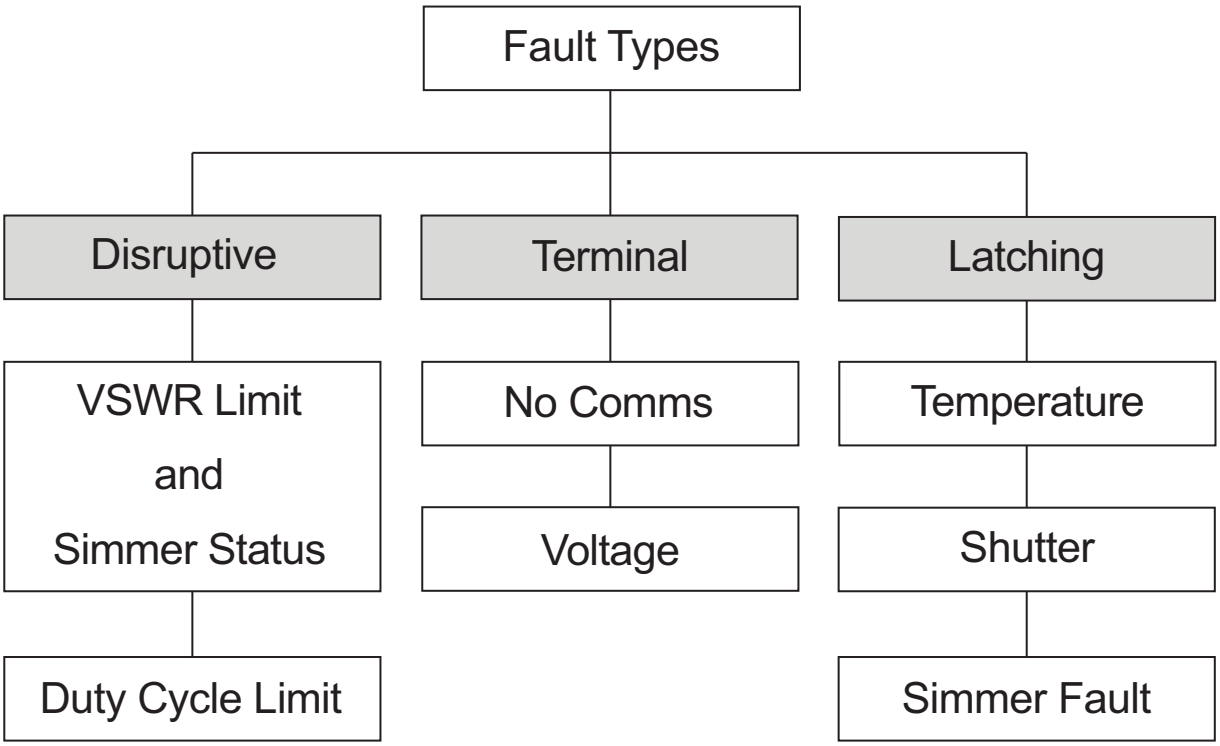

Figure 4-2. Types of J-5V Series Faults

- **Disruptive (VSWR, Simmer and Duty Cycle Limit)** - This type of condition indicates that a fault or limit condition occurred during operation. These are high speed indicator signals and they indicate that a condition was detected and corrected automatically by the control circuitry. In the event that one of these disruptive faults is asserted, the user should verify the quality of the laser processed material output.
- **Terminal** - These faults are detected on system power-up. Detection of a terminal fault condition will prevent system operation. Terminal faults are signaled by asserting the SYSTEM_FAULT line. Use the Ethernet interface to determine which condition caused the fault.

- **Latching (Temperature, Shutter and Simmer Fault) -** These faults indicate a serious J-5V Series problem and cause immediate system shutdown. These faults are latched and system operation can only be restored by correcting the fault condition and toggling the enable/fault reset signal. These faults are indicated on dedicated pin assignments. These faults are also signaled by asserting the System Fault line, as the Terminal Faults.

The latching faults and disruptive faults have dedicated pins on the Real Time I/O connector. Terminal faults require an Ethernet connection to diagnose fully.

Real Time Control and Status I/O Description

The control and status signals are summarized in Table 4-3 and are accessed through the Real Time I/O DB25 connector on the control panel. To operate the laser, two input signals are required, as indicated in Table 4-3. In order to monitor the condition of the system, five output signals are provided and recommended for use in the user's control system. Detailed descriptions and pinouts of the control connector interface are provided in Table 4-4.

Table 4-3. Real-time Control and Status Interface

IDENTIFICATION	BRIEF DESCRIPTION	CONNECTION
INPUT SIGNALS		
MODULATION	Controls laser average output power through input of pulse width and pulse period.	Required
ENABLE/FAULT RESET	Enables laser operation. System reset after fault condition.	Required
OUTPUT SIGNALS		
DUTY CYCLE LIMIT	Warning indicating that the system has exceeded the maximum duty cycle.	Recommended
VSWR LIMIT	Warning indicating an abnormally high amount of reflected RF power has occurred.	Recommended
ANALOG FORWARD	Signal proportional to the forward RF voltage.	Recommended
ANALOG REFLECTED	Signal proportional to the reflected RF voltage.	Recommended
SYSTEM FAULT	Indicates a system fault or warning	Strongly Recommended; Essentially required for automated control

Table 4-4. Real-time Control and Status I/O Pinouts

PIN	FUNCTION	DESCRIPTION
1	ANALOG FORWARD —Output signal	Analog output signal representing forward RF power from the RF amplifier to the laser head.
2	ANALOG REFLECTED —Output signal	Analog output signal representing reflected RF power from the laser head.
3	ENABLE/FAULT-RESET —Input signal	Enable is required in order to operate system. Enable must be asserted after 48 DC power is applied. This is accomplished by connecting pin # 3 to a RETURN. Fault reset is required in order to re-establish operation after a system fault occurs. This is accomplished by opening then reconnecting pin # 3 to a RETURN. This pin should not be used for safety interlock or cycled within the normal intra-day use of the laser.
4 (+) and 17 (–)	SYSTEM FAULT —Output signal	Active high, differential, digital, output signal indicating that a system fault is present.
7 (+) and 20 (–)	MODULATION —Input signal	This is a differential input signal that controls the laser output. Laser output power will be present for the duration of this pulse only. See the model-specific specifications for allowed pulse durations. This input is inhibited during the simmer ignition cycle until successful simmer has been achieved. This inhibit period can be accessed by monitoring the dual function VSWR LIMIT/SIMMER STATUS FAULT output.
10 (+) and 23 (–)	DUTY CYCLE LIMIT —Output signal	Differential digital signal that is only valid when laser output is commanded (MODULATION input high). A logic high on this signal when laser output is commanded indicates that the commanded modulation exceeds the model-specific duty cycle or pulse width limit (typically 9.1% and 26 µs respectively). This signal only goes high for that portion of the modulation command which is in violation of the model-specific duty cycle, frequency or pulse width limit.Therefore, this signal indicates which portion of the commanded modulation input is being inhibited due to the fault condition. A logic low on this signal when laser output is commanded indicates that the input modulation command is within acceptable limits. This signal is at logic low when laser output is not commanded (MODULATION input low).

Table 4-4. Real-time Control and Status I/O Pinouts (Continued)

PIN	FUNCTION	DESCRIPTION
11 (+) and 24 (–)	VSWR LIMIT —Output signal	Differential digital signal that is only valid when laser output is commanded (MODULATION input high). A logic high on this signal when laser output is commanded indicates that the reflected RF power exceeds the safe operating limit and that the protection circuit is active. This signal goes high only for that portion of the input modulation command when the VSWR protection circuit is active. Therefore, this signal indicates which portion of the commanded modulation input is being inhibited due to the fault condition. A logic low on this signal when laser output is commanded indicates that the input modulation command is within acceptable limits. This signal is at logic low when laser output is not commanded (MODULATION input low). The simmer function for this laser will operate when 48VDC is applied, the system interlock is made, and the Enable input signal or command is asserted. During the period required to ignite or establish proper simmering, this signal remains high, and when simmer is established and modulation is allowed, this simmer status will drop to logic low. If the simmer function is unable to ignite the laser discharge and achieve a normal simmering performance during the first 2 minutes after this function is enabled, it will result in the controller latching the SIMMER FAULT output (this output also serves as the VSWR LIMIT during modulation and as the "SIMMER NOT READY" indicator). If this fault were to occur, the latch fault condition will require a reset, which can be and is best accomplished by toggling the ENABLE (Pin 3) OFF and back ON (de-assert and re-assert the input signal).
14, 15, 16	RETURN	Reference for pin 1, 2, and 3
5, 6, 8,9,13, 18,19, 21, 22, & 25	RESERVED	Do Not Connect

Input Signal Requirements

The two inputs required to operate the laser are the ENABLE and MODULATION signals. Figure 4-3 shows the schematic of the input circuit for these two signals.

After the application of DC power, connecting the ENABLE to RETURN enables laser system operation. The ENABLE/RETURN connection must be opened and then closed to clear a latching fault.

The second function required to operate the laser is the MODULATION signal. This signal will determine the laser "on" interval, typically called the pulse width. The time interval between the start of one "on" period and the next "on" period is called the pulse period. The pulse width must be in the acceptable range for the specific model type. MODULATION pulse widths longer than allowed will automatically be limited to the maximum allowed pulse width by the protection circuit in the RF power module. The duty cycle must be no greater than the maximum allowed. The duty cycle is the ratio of the pulse width divided by the pulse period and then multiplied by 100. If the duty cycle, frequency or the pulse width exceeds these limits, a warning will occur on the DUTY CYCLE LIMIT output. A more complete description of this signal and typical waveforms follow later in this section.

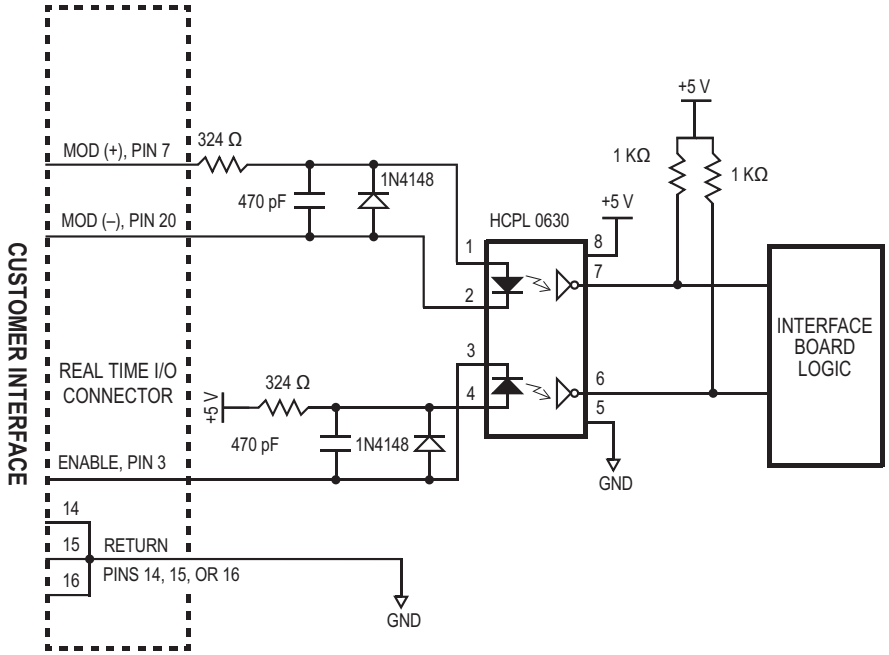

Figure 4-3. Real Time I/O Input Circuit for Laser Operation

Drive Circuit for RF Power Module

An example of a drive circuit to interface to the ENABLE and MODULATION inputs is shown in Figure 4-4.

The MODULATION input interface shown in Figure 4-4 is designed to be driven by a differential line driver meeting the requirements of EIA Standard RS-422A. Common mode voltage on the driver signals should be kept as low as possible and cannot exceed ± 15V relative to the laser system ground. Examples of suitable line drivers are indicated in Table 4-5.

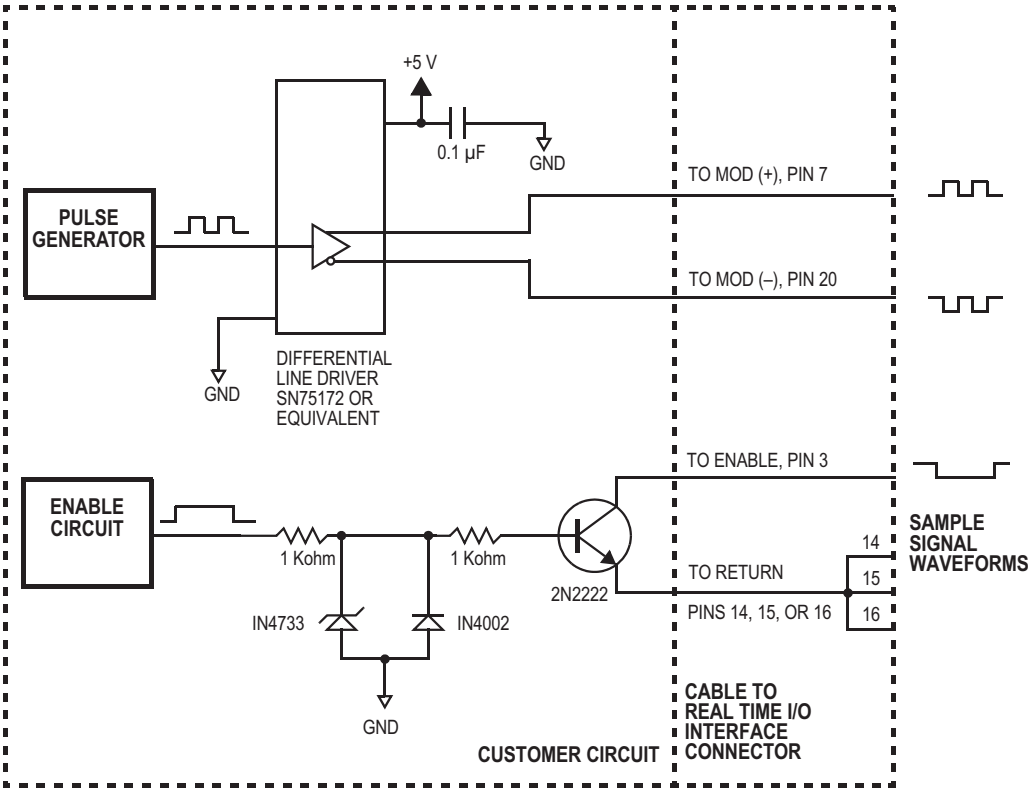

Figure 4-4. Typical Drive Circuit for Real Time Control

Table 4-5. Examples of Line Drivers Meeting RS-422A

DEVICE PART NUMBER	DESCRIPTION	MANUFACTURER	MFG WEBSITE
SN75172	Quad Driver	Texas Instruments	www.ti.com
AM26LS31C			
AM26C31			
SN75ALS191	Dual Driver		
DS26LS31C	Quad Driver		
MC75172		On Semiconductor	www.onsemi.com

Alternatively, the MODULATION and ENABLE inputs may be driven by a single-ended circuit. Examples of single-ended driver circuits are shown in Figure 4-5.

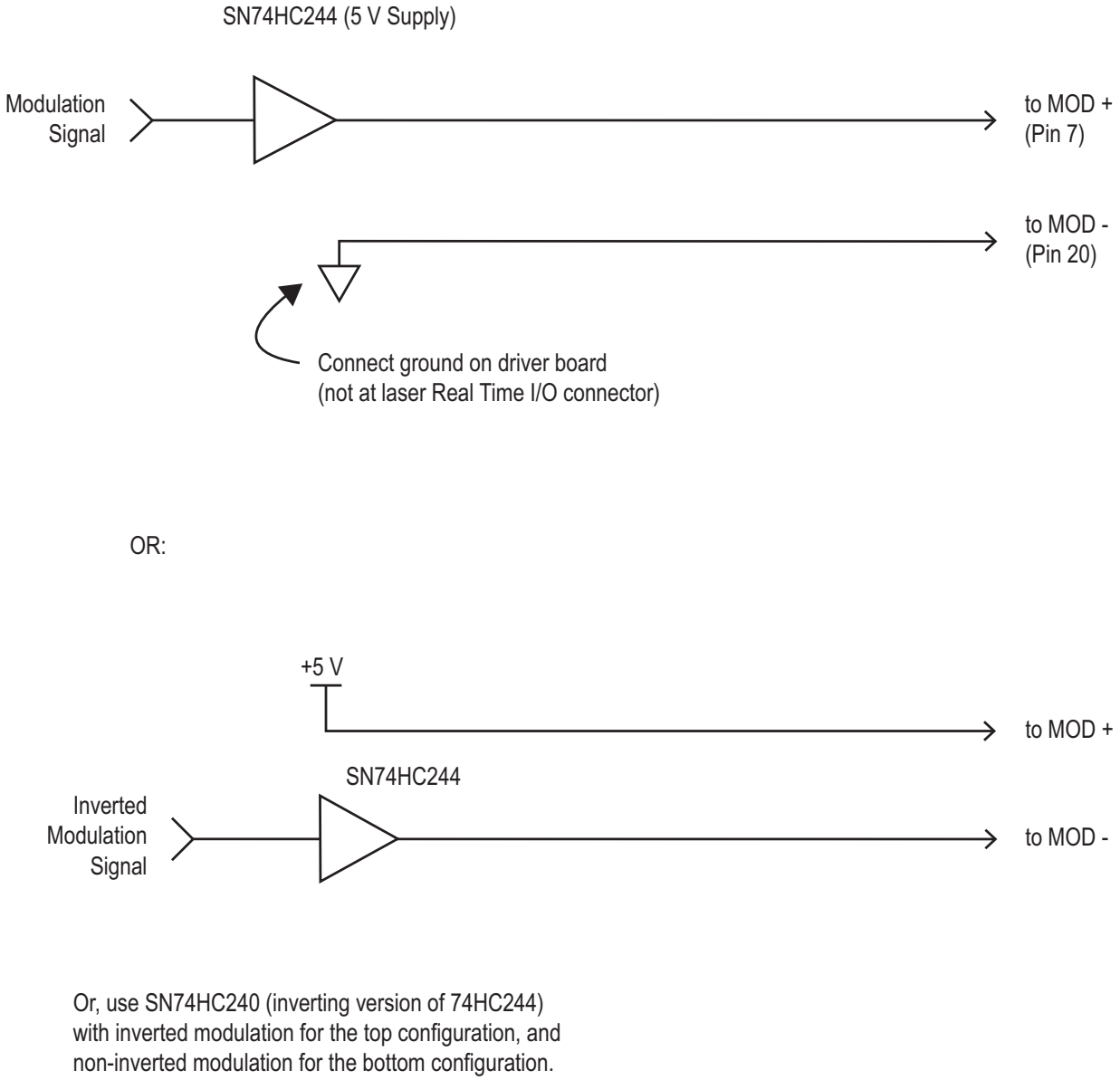

Figure 4-5. Single-Ended Driver Circuit

Output Signal Recommendation

There are five output signals from the Real Time I/O Interface Connector. Four of these indicate the status of the laser system. These four outputs (duty cycle limit, VSWR limit, analog forward, and analog reflected) provide useful information to the user on the function of the laser system. Figure 4-6 shows a schematic of the output circuits located in the RF power module interface circuit. Although monitoring of these four outputs is not required, it is strongly recommended for the overall ease of use of the complete system.

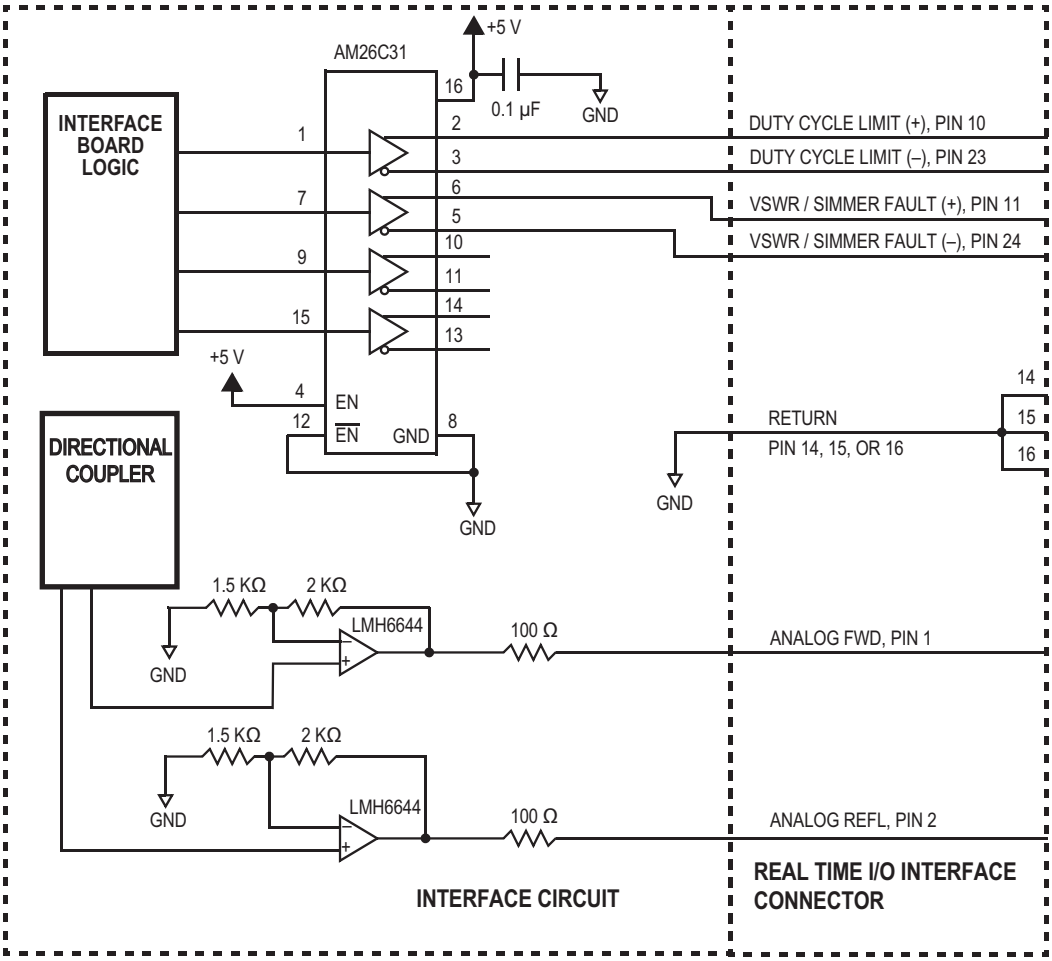

Figure 4-6. Real Time Control and Status Interface Schematic

The purpose of these signals is to warn the user of potential faults and can assist in the diagnosis of several types of operating problems. A common situation when these warnings are useful is when incorrect pulse widths and pulse periods have been selected. An example would be selecting a duty cycle of 10% (max. duty cycle = 9.1%) and the user observing unstable laser performance. The warning indicator DUTY CYCLE LIMIT will show the error and make it possible to rapidly correct this problem.

Output Signal Description

Coherent recommends using both VSWR LIMIT and DUTY CYCLE LIMIT to directly monitor disruptive faults. This class of faults allows operation but is disruptive and can lead to unwanted results.

The DUTY CYCLE LIMIT and the VSWR LIMIT disruptive faults indicate when the control circuitry in the RF power module is activated and limiting the operation of the RF power module. When these functions are activated, the output power of the laser can be unstable or much lower than expected. If there is a DUTY CYCLE LIMIT warning, then check the MODULATION pulse width and pulse period to ensure that they are not exceeding the model specific maximum duty cycle limit or maximum pulse width .

As described earlier, the VSWR Limit output is shared with the SIMMER STATUS/FAULT output, with assertion of these signals being dependent on the operating cycle of the laser. In the case of initial laser startup and Simmer circuits being active, this output may assert if simmer is not yet achieved during a 2-minute time period and may be latched if not achieved. If simmer is successful, the laser will enter normal running mode and VSWR faults may then be seen at this output. VSWR faults are an indication that the ratio of reflected RF voltage to forward RF voltage has exceeded a preset limit. Coherent recommends monitoring of this signal to efficiently and effectively sequence laser processing and ensure normal process performance.

Monitoring Circuit Example

An example of a monitoring circuit that can be connected to the output of the Real Time I/O interface circuit is shown in Figure 4-7.

The J-5V Series output circuits shown in Figure 4-7 are designed to use line receivers meeting the requirements of EIA Standard RS-422A. Common mode voltages on the drive signals should be kept as low as possible and cannot exceed ± 15 Volts relative to the laser system ground. Examples of suitable line receivers are shown in Table 4-6.

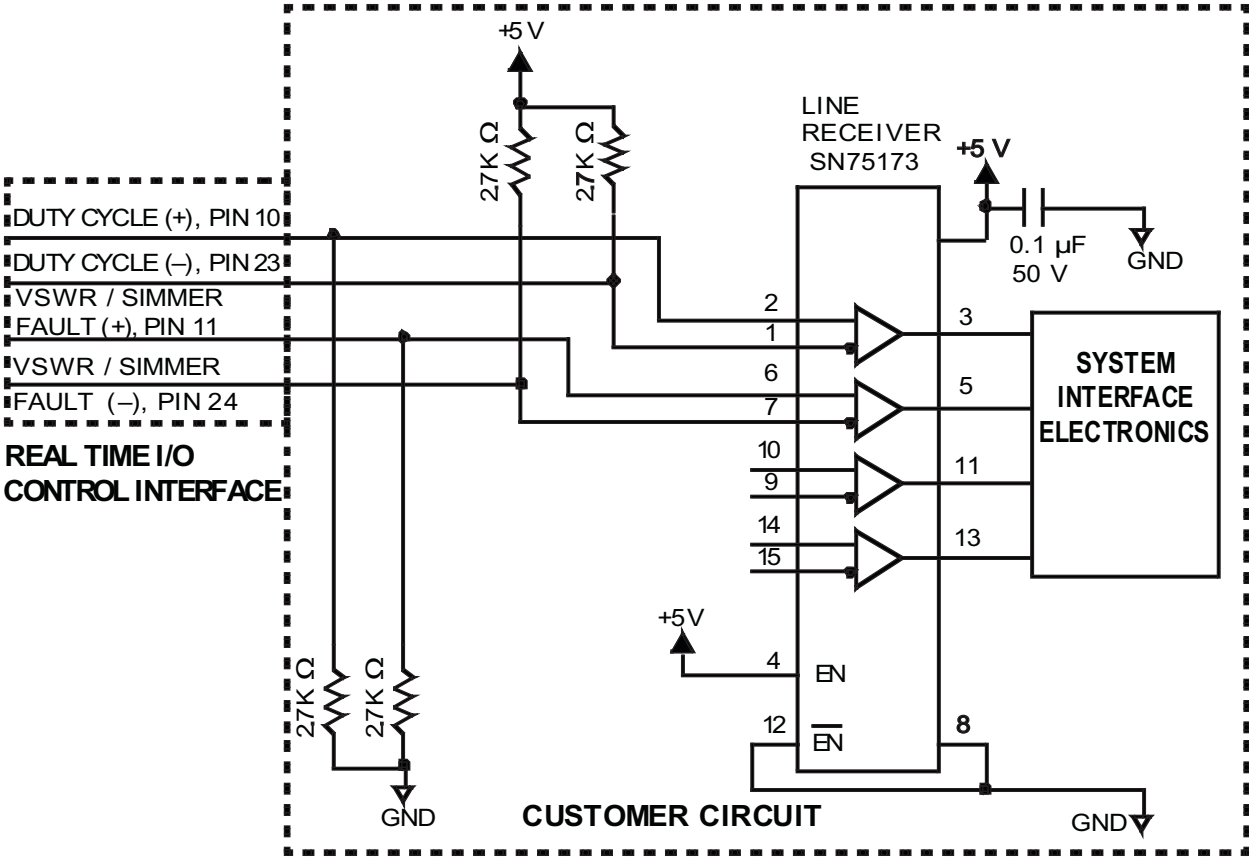

Figure 4-7. Typical Monitoring Circuit
Example Status Monitor (Real Time I/O Control and Status Interface)

Table 4-6. Examples of Line Receivers Meeting RS-422A

DEVICE PART NUMBER	DESCRIPTION	MANUFACTURER	MFG WEBSITE
SN75173	Quad Receiver	Texas Instruments	www.ti.com
AM26LS32A			
MC3486			
AM26C32			
SN75157	Dual Receiver		
DS26LS32C	Quad Receiver	National Semiconductor	www.national.com

Control Using DIAMOND Remote Control

A Remote Controller is available for use with the J-5V Series laser, see Figure 4-8. Contact Coherent for additional information. For specifications and operating instructions, refer to the DIAMOND OEM/Industrial Lasers Remote Control Operator's Manual, part number 1235412.

Figure 4-8. DIAMOND Remote Controller

Simmer

The simmer function for this laser will operate when the laser ENABLE/FAULT RESET input signal is asserted after the 48VDC is applied (see Pin 3 in Table 4-4 for what is required to be asserted). If the simmer function is unable to ignite the laser discharge and achieve a normal simmering performance during the first 2 minutes after this function is enabled, it will result in the controller asserting and latching the SIMMER FAULT output (an output which also serves as the VSWR LIMIT during modulation and as the "SIMMER NOT READY" indicator as noted below). If this fault were to occur, the latch fault condition will require a reset, which can be and is best accomplished by toggling the ENABLE (Pin 3) OFF and back ON (de-assert and re-assert the input signal).

The output signal on Pins 11 and 24 of the Real-Time Control connector, listed as both VSWR LIMIT and SIMMER FAULT, will serve as an indicator of the simmer status, "SIMMER NOT READY as well, in this version of the J-5V product controller ONLY. This indicator operates during the initial startup of the simmer function following the powering up and enabling of the laser (assuming the SYSTEM INTERLOCK is also asserted). During the 2 minutes before the SIMMER FAULT could be encountered, the output will be asserted until the proper simmering function is established. If the 2 minutes expires before the laser is properly simmering, the output will remain asserted, now in the latched fault condition now indicating the actual SIMMER FAULT has occurred. If this latching fault occurs, the disabling and re-enabling of the laser ENABLE/FAULT RESET input clears the latch and allows for restarting this simmer initiation cycle. This output should be monitored by the machine controller and used as a sequencer for allowing the laser processing to begin. Also, because the simmer function is only active when the laser is enabled, and because the establishment of the proper simmering condition takes time, it is imperative that the enable function remain asserted during normal operation of the laser processing functions. The ENABLE should ONLY be de-asserted when the laser pulsing is not to be used for an extended period of time and when there is ample time to re-establish the simmering prior to waiting to pulse the laser again.

During the up to 2 minute interval, the modulation of the laser will not be allowed to function. The laser cannot be pulsed.

If a remote is being used and the key-switch is cycled to restart the simmer initiation cycle, the ENABLE is not set until 10 seconds after turning the key-switch ON. The ready light blinks during this 10 second period. Afterwards, when the remote is used, it could be up to 2 minutes and 10 seconds after turning ON the key-switch before the laser can be modulated or allowed to output laser energy.

Output Signal Waveforms

Figure 4-9, Figure 4-10 and Figure 4-11 provide representative input and resulting output signals under normal operation, a VSWR fault condition and a duty cycle fault condition respectively. Each figure provides a detailed description of the input signals and the resulting output signals.

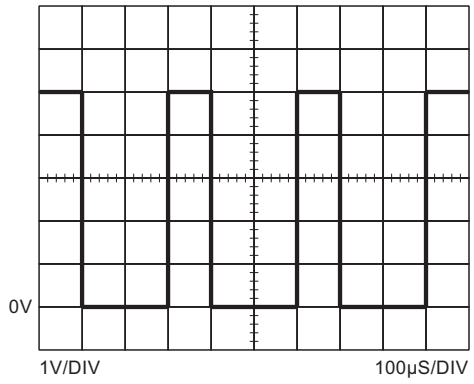

Modulation (+): Input
pin 7 (reference pin 14)

Pulse Width = 6 µs

Pulse Period = 1000 µs

Duty Cycle = 0.6%

Laser is ON when modulation signal is high

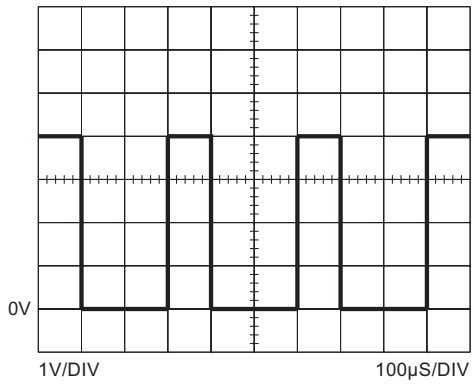

Analog Forward: Output
pin 1 (reference pin 14)

Analog Forward signal is high anytime the modulation signal is active (high) and within specification.

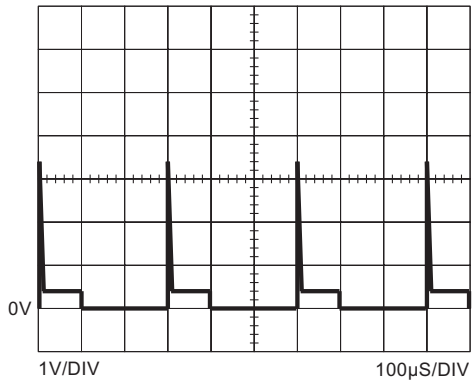

Analog Reflected (+): Output
pin 2 (reference Pin 14)

Analog Reflected signal remains low when the modulation signal is high, except for a short spike at the leading edge of the pulse.

Figure 4-9. RF Amplifier Output Signals - Normal Operating Conditions

Modulation
(pin 7 referenced to pin 14)

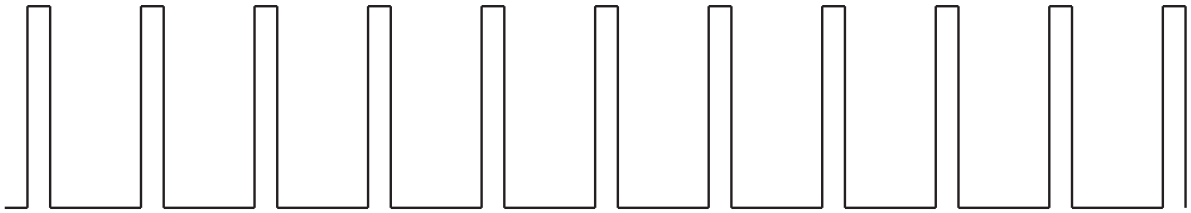

1. If VSWR fault is detected on the first pulse,

Analog Forward
(pin 1 referenced to pin 14) RF is applied to the laser during a HI condition.

2. Subsequent pulses are supressed until the VSWR controller algorithm determines it is safe to resume delivery of forward power.

VSWR Limit
(pin 11 referenced to pin 14)

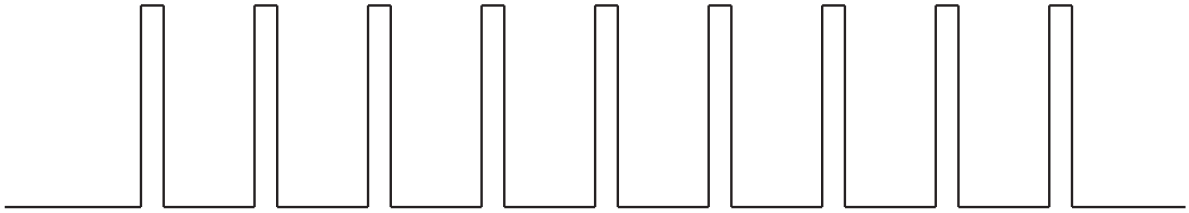

3. Pulses supressed due to a VSWR Fault appear as HI pulses on VSWR Limit.

Figure 4-10. RF Amplifier Output Signals - VSWR Fault

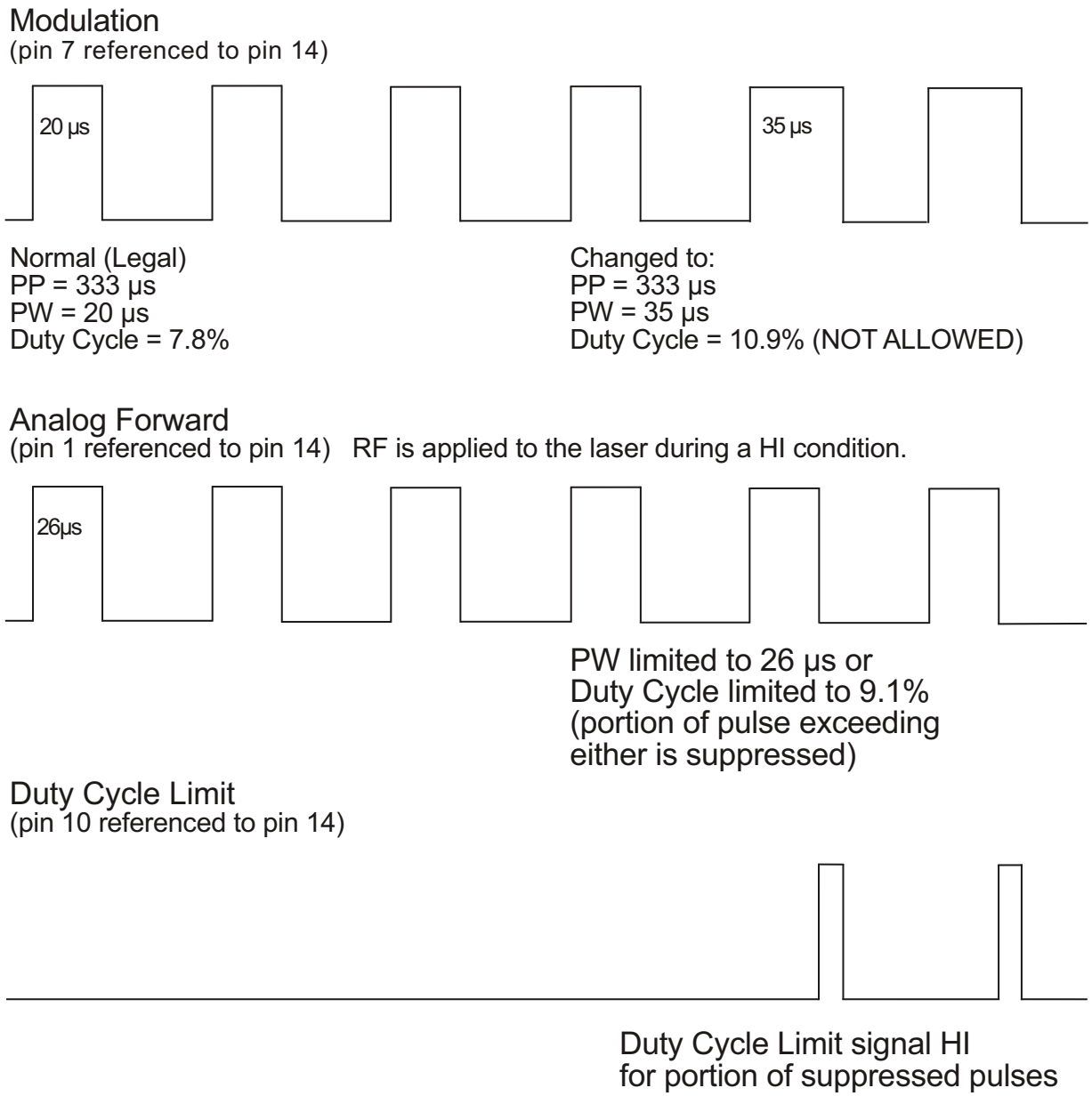

Figure 4-11. RF Amplifier Output Signals - Duty Cycle Fault

Extended Interface Connector and Signal Descriptions

The Extended Interface connector gives the user access to more monitoring and control features of J-5V Series laser systems. There are 3 inputs and 4 outputs on this connector that are described in Table 4-7. Pin assignments and signal specifications are described in Table 4-8 on page 4-21.

System Interlock

A System Interlock input signal is required to enable modulation to the laser. This input can also be used to disable modulation when put in series with a safety circuit.

Shutter Control and Status

The Shutter Interlock input signal is used to indicate to the system that a shutter is available (the shutter is an optional component on some model types) and to enable the shutter. The shutter is commanded to the open or closed state by sending the appropriate signal to the shutter command input. Signals are also available to monitor the shutter's position, one for the Shutter Closed Status and one for the Shutter Open Status. Finally, there is a shutter latching fault signal that indicates if the shutter is in a fault condition or is stuck between opening and closing.

Over Temperature Fault

This output signal indicates that the operating temperature is above a safe operating condition. The presence of this latching fault will shut down the system.

Extended Interface Signal Descriptions

Table 4-7. Extended Interface Signal Descriptions

IDENTIFICATION	BRIEF DESCRIPTION	CONNECTION
INPUT SIGNALS		
Shutter Command	Opens and closes shutter (if shutter option is installed)	Required*
System Interlock	Enables modulation	Required
Shutter Interlock	Enables shutter operation	Required*
OUTPUT SIGNALS		
Shutter Closed Status	Signals that shutter is closed	Recommended*
Shutter Open Status	Signals that shutter is open	Recommended*
Shutter Latching Fault	Indicates a shutter fault	Recommended*
Over Temperature Latching Fault	Indicates an unsafe temperature condition	Recommended
*Note: Shutter signals apply if shutter option is installed		

NOTICE!
The optional shutter is provided for laser safety purpose only. This shutter is not to be used for beam modulation (as a 'process shutter').

Extended Interface Pin Descriptions

Table 4-8. Extended Interface Pin Descriptions

PINS	FUNCTION	DESCRIPTION
1, 2, 7, 11, 14, 19, & 21	Reserved	Do not connect.
9 (+) and 22 (–)	Shutter Closed Status	Active high, differential, digital, output signal indicating the shutter is closed. This output signal will be asserted when the shutter is present and closed. During latching faults, this signal will not be present since the shutter is disabled.
10 (+) and 23 (–)	Reserved	Do not connect.
12, 13	Return	Reference for pins 24, 25
15 (+) and 3 (–)	Shutter Command	Active high, digital, input signal that commands the shutter to open. This input signal is used to command the operation of the shutter.
16 (+) and 4 (–)	Reserved	Do not connect.
17 (+) and 5 (–)	Shutter Open Status	Active high, differential, digital, output signal indicating the shutter is open. This output signal will be asserted when the shutter is present and open. During system faults, this signal will not be present since the shutter is disabled.
18 (+) and 6 (–)	Shutter Latching Fault	Active high, differential, digital, output signal indicating that there is a shutter fault. This output signal will be asserted when a shutter fault has been detected. There are two conditions which can cause a shutter fault. First, if the shutter takes too long to swing from open to closed and vice versa. Second, a fault will be generated if the customer is commanding the shutter to be closed and the shutter closed status signal is not detected. For the purposes of fault detection, shutter open, shutter moving, or neither open nor closed are tested for determining a fault condition. A Shutter Latching Fault causes system shutdown.
20 (+) and 8 (–)	Over Temperature Fault	Active high, differential, digital, output signal indicating an operating temperature outside an allowed range has occurred. This output signal will be asserted when any peripheral microcontroller detects a temperature that is outside the allowed temperature range. Refer to Appendix B: Fault Matrix in the operator's manual for ranges. Over temperature latching fault is a system fault that causes shutdown.
24	System Interlock	This pin must be connected to pin 12 (return) for laser to operate. It has priority over all other interlocks.
25	Shutter Interlock	This pin must be connected to pin 13 (return) for the shutter to operate. This signal does not inhibit system operation. If a shutter is not present, the shutter interlock must not be grounded or a shutter fault condition will be present. If the system does not have a shutter, the Shutter Interlock must be left open.

DIAMOND™ J-5V Series OEM Lasers Preinstallation Manual
©Coherent Inc., 12/2015 (RoHS), printed in the USA or Thailand
Part No. 1279476 Rev. AA ***Preliminary***

DIAMOND™ J-5V Series OEM Lasers Preinstallation Manual
©Coherent Inc., 1/2016 (RoHS), printed in the USA or Thailand
Part No. 1279476 Rev. AA